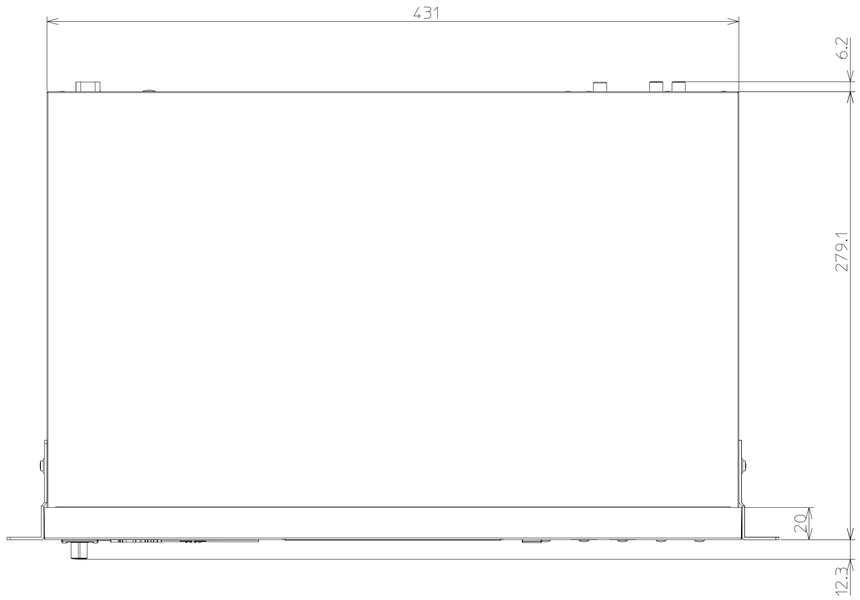
431
6.2
279.1
20
12.3

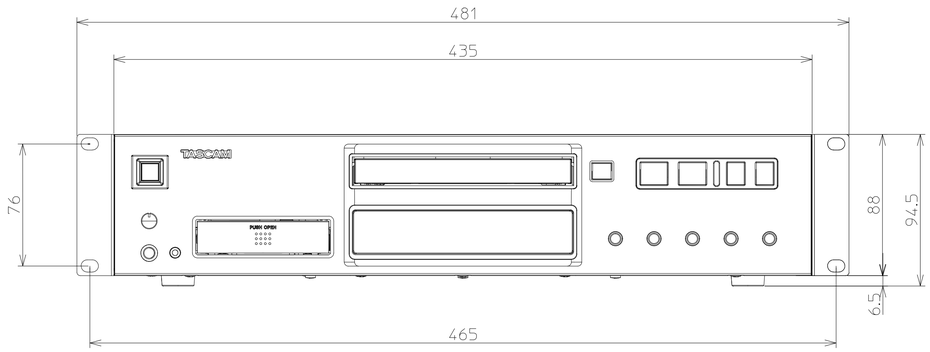
481
435
76
TASCAM
PUSH OPEN
88
94.5
6.5
465

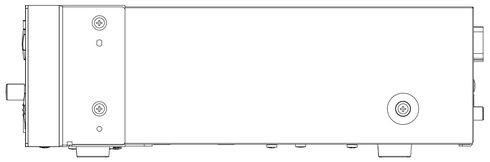

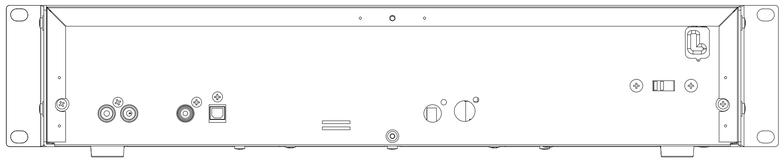

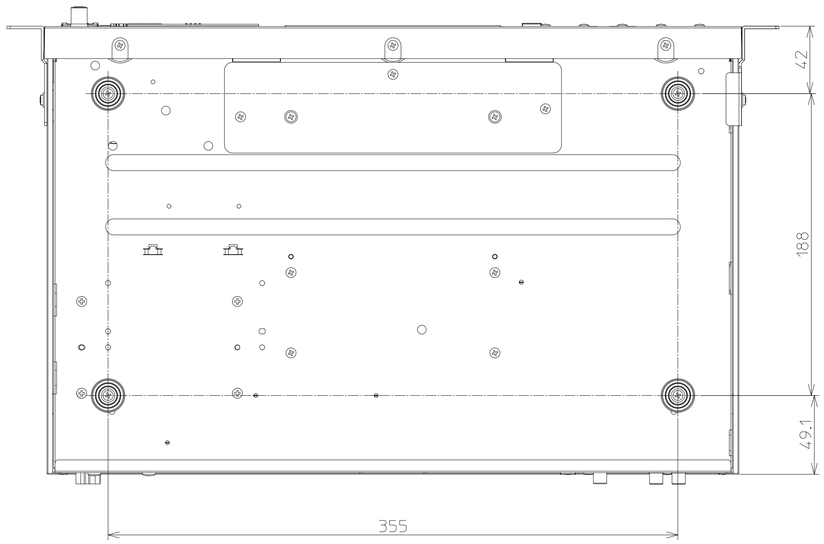
42
188
49.1
355