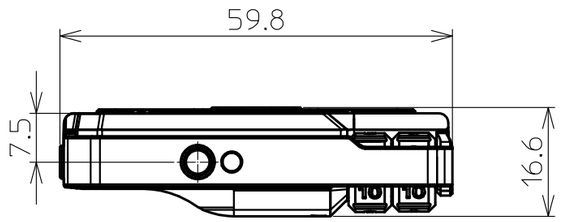
59.8
7.5
16.6

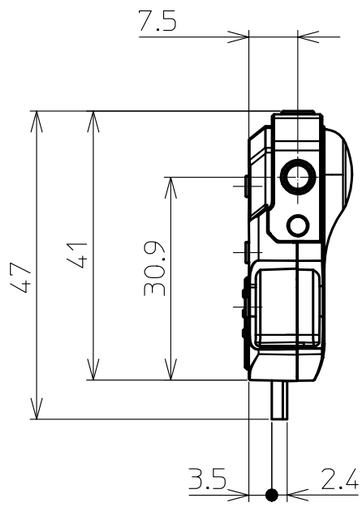
7.5
47
41
30.9
3.5
2.4

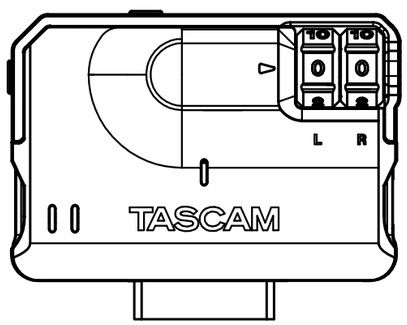
L
R
TASCAM

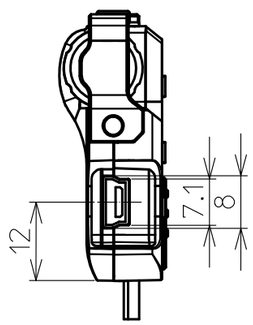
12
7.1
8

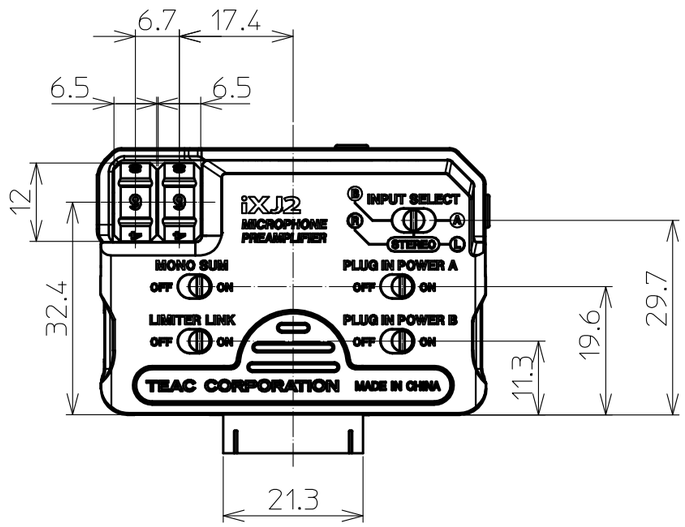
6.7
17.4
6.5
6.5
12
32.4
iXJ2
MICROPHONE PREAMPLIFIER
INPUT SELECT
STEREO
MONO SUM
OFF ON
PLUG IN POWER A
OFF ON
LIMITER LINK
OFF ON
PLUG IN POWER B
OFF ON
TEAC CORPORATION
MADE IN CHINA
11.3
19.6
29.7
21.3