TEAC

OPWSA70TEA01

取扱説明書

WS-A70

Network Music System

ティアック製品をお買い上げいただき、誠にありがとうございます。
ご使用になる前にこの取扱説明書をよくお読みください。
また、お読みになったあとは、いつでも見られるところに大切に保管してください。
末永くご愛用くださいますよう、お願い申し上げます。

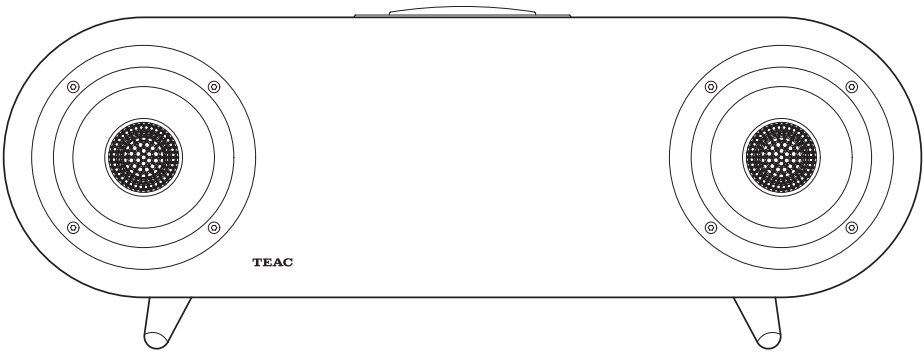

Chromecast built-in

Wi Fi CERTIFIED

AirPlay

Bluetooth®

"DSD" is a registered trademark.

The Bluetooth® word mark and logos are registered trademarks owned by Bluetooth SIG, Inc. and any use of such marks by TEAC CORPORATION is under license.

Wi-Fi, Wi-Fi Protected Access® (WPA), the Wi-Fi logo and Wi-Fi Alliance are registered trademark of Wi-Fi Alliance. Wi-Fi CERTIFIED and Wi-Fi Protected Setup are trademark of Wi-Fi Alliance.

Android、Google Play、Google Play ロゴ、Chromecast built-in および Chromebook は、Google Inc. の商標です。

Apple, AirPlay, the AirPlay logo, iPad, iPhone, iPod touch and Mac are trademarks of Apple Inc., registered in the U.S. and other countries. App Store is a service mark of Apple Inc.

IOS is a trademark or registered trademark of Cisco in the U.S. and other countries and is used under license.

iPhone の商標は、アイホン株式会社のライセンスにもとづき使用されています。

その他、記載されている会社名、製品名、ロゴマークは各社の商標または登録商標です。

オープンソースに関する著作権およびライセンスは巻末の「ソフトウェアに関する重要なお知らせ」に記載します。

目次

付属品 4

お使いになる前に 4
　設置の注意 4
　お手入れ 4
　ユーザー登録について 4

安全にお使いいただくために. 5

無線機器の使用に関する注意. 7
　Bluetooth® 無線通信について 7

接続 8
　無線 LAN アンテナを取り付ける 9

各部の名前とはたらき. 10

基本操作. 12
　主電源をオンにする. 12
　電源をスタンバイまたはオンにする. 12
　音量を調節する 13
　入力ソースを選択する 13
　オートパワーセーブについて 14
　ディスプレーについて 14

本機でできること 15

Bluetooth スピーカーとして使う. 16
　ペアリングする (初期設定). 16
　Bluetooth 機器を再生する 17

準備 18
　TEAC HR AirCast をインストールする 18
　ネットワークに接続する 18

AirPlay スピーカーとして使う 21

デジタルプレーヤーなどの音声を聴く (DIGITAL IN). . 21

アナログプレーヤーなどの音声を聴く (LINE IN). . 21

設定 22
　SLEEP(スリープ) 23
　DIMMER (ディマー) 23
　APS(オートパワーセーブ). 23
　PS-MODE(パワーセーブモード) 23
　BASS EQ (バス イコライザー) 24
　Wi-Fi CONF(Wi-Fi 設定) 24
　PAIRING (ペアリング) 24
　INFORMATION(インフォメーション) 24
　RESET (リセット) 25

困ったときは 26
　一般 26
　Bluetooth 26

仕様 27

ソフトウェアに関する重要なお知らせ. 28
　その他第三者ソフトウェアに関するお知らせ . . 34

保証とアフターサービス 43

付属品

万一付属品に不足や損傷がありましたら、お買い上げになった販売店、または弊社 AV お客様相談室 (裏表紙に記載) にご連絡ください。

電源コード × 1
無線 LAN アンテナ × 2
取扱説明書 (本書、保証書付き) × 1
クイックスタートガイド × 1

音のエチケット



楽しい音楽も、場合によっては大変気になるものです。静かな夜間には小さな音でもよく通り、隣近所に迷惑をかけてしまうことがあります。
適当な音量を心がけ、窓を閉めたりヘッドホンを使用するなどして、お互いに快適な生活環境を守りましょう。
このマークは音のエチケットのシンボルマークです。

お使いになる前に

設置の注意

直射日光が当たる場所や暖房器具の近くなど、温度が高くなるところに置かないでください。また、アンプなど熱を発生する機器の上には置かないでください。変色や変形、故障の原因となります。

- エンクロージャー (キャビネット) やフロントグリルに硬いものを当てないでください。傷がついたり、スピーカーユニットが損傷する恐れがあります。
- ゴムやビニール製品を長時間触れさせると、表面を傷めることがありますので避けてください。
- 本機は磁力の影響が出にくい設計になっていますが、本機の上に磁気記録のカード、テープ、ディスク類、その他磁気の影響を受けやすい物を置かないでください。データの消失や破損の原因となることがあります。

お手入れ

エンクロージャーは天然木なので水分は禁物です。乾いた布で乾拭きしてください。

⚠ お手入れは安全のため電源プラグをコンセントから抜いて行ってください。

ユーザー登録について

TEAC のウェブサイトにて、オンラインでのユーザー登録をお願いいたします。
https://teac.jp/jp/signup


愛情点検

電源コードや本体に異常がないか、定期的に点検してください。
内部にほこりがたまったまま、長い間掃除をしないと火災や故障の原因となることがあります。
特に、湿気の多くなる梅雨期の前に行うと、より効果的です。
5 年に 1 度は、販売店またはティアック修理センター (裏表紙に記載) に内部の点検をご依頼ください。費用についてはお問い合わせください。

製品を安全に正しくお使いいただき、あなたや他の人々への危害や財産への損害を未然に防止するために、以下の注意事項をよくお読みください。

警告	**以下の内容を無視して誤った取り扱いをすると、人が死亡または重傷を負う可能性が想定される内容を示しています。**
 電源プラグをコンセントから抜く	**万一、異常が起きたら** **煙が出たり、変なにおいや音がするときは** **機器の内部に異物や水などが入ったときは** **この機器を落としたり、カバーを破損したときは** すぐに機器本体の電源スイッチを切り、必ず電源プラグをコンセントから抜いてください。 異常状態のまま使用すると、火災・感電の原因となります。 販売店またはティアック修理センター (裏表紙に記載) に修理をご依頼ください。
 禁止	**電源コードを傷つけない** **電源コードの上に重いものをのせたり、コードを壁や棚との間に挟み込んだり、本機の下敷きにしない** **電源コードを加工したり、無理に曲げたり、ねじったり、引っ張ったり、熱器具に近づけて加熱したりしない** コードが傷んだまま使用すると火災・感電の原因となります。 万一、電源コードが破損したら (芯線の露出、断線など)、販売店またはティアック修理センター (裏表紙に記載) に交換をご依頼ください。
	付属の電源コードを他の機器に使用しない 故障、火災、感電の原因となります。
	交流 100 ボルト以外の電圧で使用しない この機器を使用できるのは日本国内のみです。表示された電源電圧 (交流 100 ボルト) 以外の電圧で使用しないでください。また、船舶などの直流 (DC) 電源には接続しないでください。 火災・感電の原因となります。
	この機器を設置する場合は、放熱をよくするために、壁や他の機器との間は少し (20 cm 以上) 離して置く すきまをあけないと内部に熱がこもり、火災の原因となります。
	この機器の通風孔などから内部に金属類や燃えやすい物などを差し込んだり、落としたりしない 火災・感電の原因となります。
	この機器の通風孔をふさがない 通風孔をふさぐと内部に熱がこもり、火災の原因となります。
 指示	**電源プラグにほこりをためない** 電源プラグとコンセントの周りにゴミやほこりが付着すると、火災・感電の原因となります。 定期的 (年 1 回くらい) に電源プラグを抜いて、乾いた布でゴミやほこりを取り除いてください。
 禁止	**機器の上に花びんや水などが入った容器を置かない** 内部に水が入ると火災・感電の原因となります。

	警告	以下の内容を無視して誤った取り扱いをすると、人が死亡または重傷を負う可能性が想定される内容を示しています。
 分解禁止	**この機器のカバーは絶対に外さない** カバーを開けたり改造すると、火災・感電の原因となります。 内部の点検・修理は販売店またはティアック修理センター (裏表紙に記載) にご依頼ください。	
	この機器を改造しない 火災・感電の原因となります。	

	注意	以下の内容を無視して誤った取り扱いをすると、人が傷害を負う可能性が想定される内容および物的損害のみの発生が想定される内容を示しています。
 電源プラグをコンセントから抜く	**移動する場合は、主電源を切り、必ず電源プラグをコンセントから抜き、外部の接続ケーブルを外す** ケーブルが傷つき、火災・感電の原因や、引っ掛けてけがの原因になることがあります。	
	旅行などで長期間この機器を使用しないときやお手入れの際は、安全のため必ず電源プラグをコンセントから抜く 通電状態の放置やお手入れは、漏電や感電の原因となることがあります。	
 指示	**オーディオ機器を接続する場合は、各々の機器の取扱説明書をよく読み、電源を切り、説明に従って接続する** **また、接続は指定のケーブルを使用する**	
	この機器は約 10 kg あり大変重いので、開梱や持ち運びの際はけがをしないように注意する。	
	この機器はコンセントの近くに設置し、電源プラグは簡単に手が届くようにする 異常が起きた場合は、すぐに電源プラグをコンセントから抜いて、完全に電源が切れるようにしてください。	
	この機器には、付属の電源コードを使用する それ以外の物を使用すると、故障、火災、感電の原因となります。	
 禁止	**ぐらついた台の上や傾いた所など不安定な場所に置かない** **湿気やほこりの多い場所に置かない。風呂、シャワー室では使用しない** **調理台や加湿器のそばなど油煙や湯気があたる場所に置かない** 火災・感電やけがの原因となることがあります。	
	電源プラグを抜くときは、電源コードを引っ張らない コードが傷つき、火災・感電の原因となることがあります。 必ずプラグを持って抜いてください。	
 禁止	**濡れた手で電源プラグを抜き差ししない** 感電の原因となることがあります。	

本機使用上の注意

本機の使用周波数は 2.4GHz/5GHz 帯です。この周波数帯では電子レンジ等の産業・科学・医療用機器のほか、免許を要する工場の製造ラインで使用されている移動体識別用の構内無線局、免許を要しない特定小電力無線局や免許を要するアマチュア無線局などが運用されています。
他の機器との干渉を防止するために、以下の点に十分ご注意いただきご使用ください。

- 本機を使用する前に、近くで他の無線局が運用されていないことを確認してください。
- 万一、本機と他の無線局との間に電波干渉が発生した場合には、速やかに本機の使用場所を変えるか、使用を停止してください。
- 不明な点その他にお困りのことが起きたときは、お買い上げの販売店または、弊社 AV お客様相談室 (裏表紙に記載) へお問い合わせください。



本機は 2.4GHz 帯を使用する無線機器です。変調方式として FH-SS、DS-SS および OFDM 変調方式を採用し、与干渉距離は 40m です。

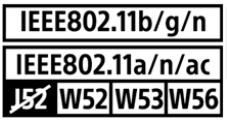

本機は IEEE 802.11a/b/g/n/ac 規格に準拠しています。 (W52/W53/W56)
5GHz 帯 (W52/W53) の屋外での使用は禁止されています。

本機は電波法に基づく小電力データ通信システム無線局設備として技術基準適合証明を受けています。従って、本機を使用するときに無線局の免許は必要ありません。ただし、以下の事項を行うと、法律で罰せられることがあります。

- 分解 / 改造すること
- 本機に貼ってある証明ラベルをはがすこと



- 本機の 5GHz 帯無線 LAN(W52/W53) を屋外で使用すること

アンテナは必ず付属品を使用してください。他のアンテナを使用して生じた電波障害や不具合等について、当社では責任を負いかねます。また、本製品は日本国内でのみご使用ください。

- 本機は電波を使用しているため、第三者が故意または偶然に傍受することが考えられます。
  重要な通信や人命にかかわる通信には使用しないでください。
  通信時に、データや情報の漏洩が発生しても責任を負いかねます。予めご了承ください。

- 次の場所では本機を使用しないでください。
  再生音が途切れたり、ノイズが出る場合があります。
  - 2.4GHz/5GHz 用周波数帯域を利用する、無線 LAN、電子レンジ、デジタルコードレス電話、Bluetooth などの機器の近く。
    電波が干渉して音が途切れることがあります。
  - ラジオ、テレビ、ビデオ機器、BS/CS チューナーなどのアンテナ入力端子を持つ AV 機器の近く。
    音声や映像にノイズがのることがあります。

Bluetooth® 無線通信について

携帯電話等 Bluetooth 機器と本機の距離は約 10m 以内で使用してください。
ただし使用状況によっては通信有効範囲が短くなることがあります。
すべての Bluetooth 機能対応製品との無線通信を保証するものではありません。
本機と Bluetooth 対応機器との互換性については、各 Bluetooth 対応機器に付属の取扱説明書を参照するか、お買い上げの販売店または、弊社 AV お客様相談室 (裏表紙に記載) にお問い合わせください。

プロファイル

本機は、以下の Bluetooth プロファイルに対応しています。

- A2DP (Advanced Audio Distribution Profile)
- AVRCP (Audio/Video Remote Control Profile)

Bluetooth 無線通信で音声伝送を行うには、Bluetooth 機器が A2DP に対応している必要があります。
Bluetooth 機器の再生を制御するには、Bluetooth 機器が AVRCP に対応している必要があります。
ただし、同じプロファイルに対応していても、Bluetooth 機器の仕様により、機能が異なる場合があります。

通信セキュリティ

本機は、Bluetooth 無線通信で Bluetooth の標準規格に準拠したセキュリティ機能に対応していますが、通信の秘匿性を保障するものではありません。
Bluetooth 無線通信で情報の漏洩が発生しましても、弊社は一切の責任を負いかねます。

接続

⚠ 全ての接続が終わってから電源をオンにしてください。

- 接続する機器の取扱説明書をよく読み、説明に従って接続してください。
- ノイズ発生の原因となるため、各接続ケーブルを電源コードと一緒に束ねないでください。
- 各プラグはしっかりと差し込んでください。

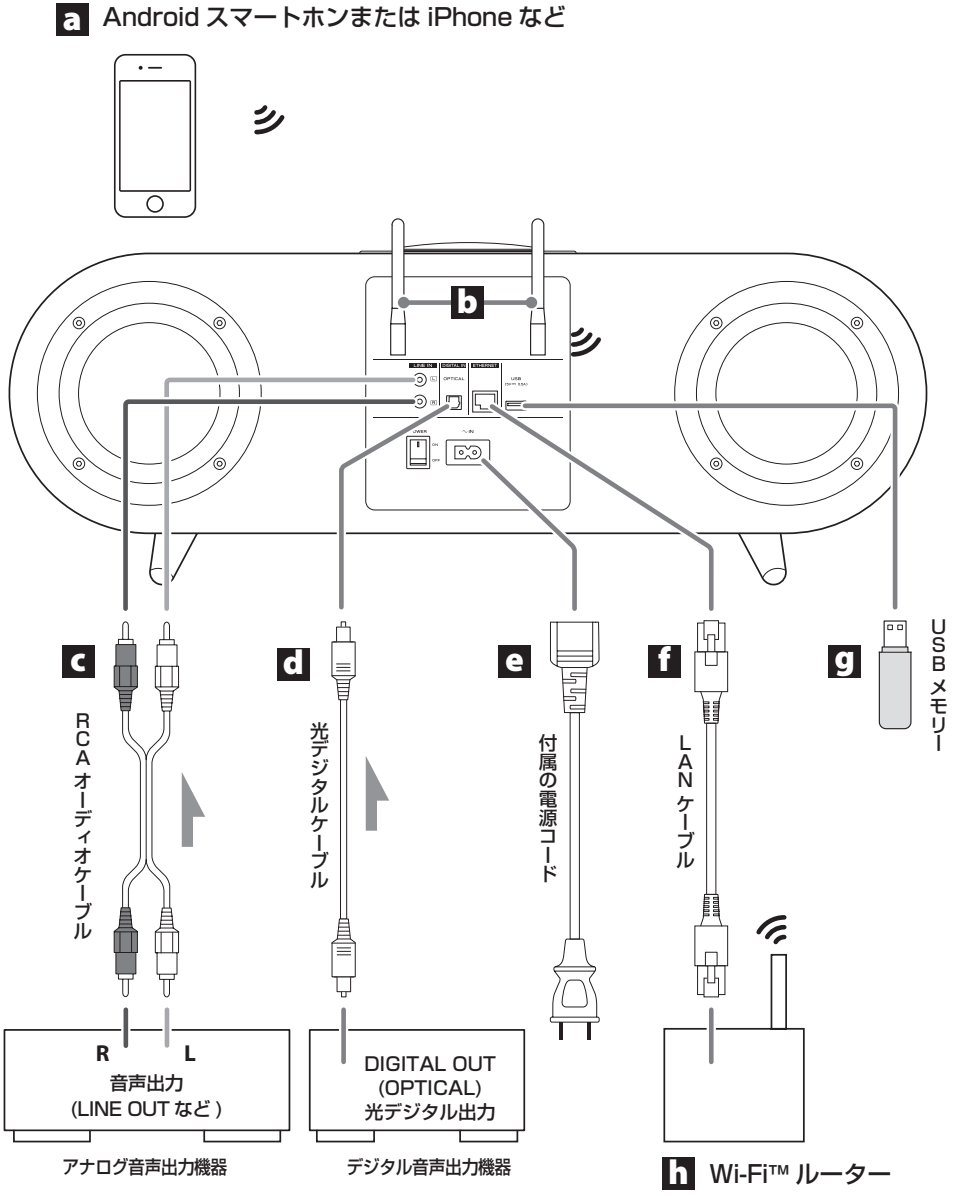

a Android スマートホンまたは iPhone など

アプリをインストールして、本機をコントロールします。

b 無線 LAN アンテナ端子 / 無線 LAN アンテナ

付属の無線 LAN アンテナを接続します。

c アナログ音声入力端子 (LINE IN)

アナログ音声出力機器を接続します。

接続には市販の RCA オーディオケーブルをお使いください。

本機の R 端子と音声出力機器の R 端子、本機の L 端子と音声出力機器の L 端子をそれぞれ接続してください。

RCA オーディオケーブル



d デジタル音声入力端子 (DIGITAL IN)

デジタル音声出力機器を接続します。

接続には市販の角型光デジタルケーブルをお使いください。

e 電源インレット (～ IN)

付属の電源コードを差し込んでください。
全ての接続が終わったら、電源プラグを AC100V の電源コンセントに差し込んでください。

付属の電源コード以外は使わないでください。火災や感電の原因になることがあります。また、長期間使用しないときは、コンセントから電源プラグを抜いておいてください。

f イーサネット端子 (ETHERNET)

ネットワークに有線で接続するときは、この端子に LAN ケーブルを接続してください。

接続には市販の LAN ケーブルをお使いください。

- LAN ケーブルが接続されているとき、本機の無線 LAN (Wi-Fi) 機能は無効になります。

g USB 端子 (USB)

USB メモリーを接続します。

- 専用アプリをあらかじめインストールしたスマートホンやタブレットを使って操作します。

h Wi-Fi™ ルーター

本機やメディアサーバー、スマートホンなどを接続し、ネットワークを構成します。

無線 LAN アンテナを取り付ける

以下の手順で、付属のアンテナ (2 本) を取り付けてください。

1 付属のアンテナをアンテナ端子に差し込む。

2 アンテナのナットを回してアンテナ端子に固定する。

3 アンテナを起こす。

注意

- アンテナを曲げる向きに注意してください。アンテナは、一方向にしか曲がりません。アンテナを曲げるときは、無理に曲げないでください。

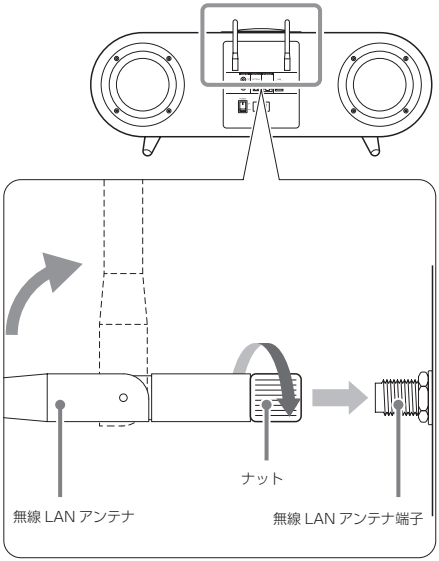

各部の名前とはたらき

フロントパネル

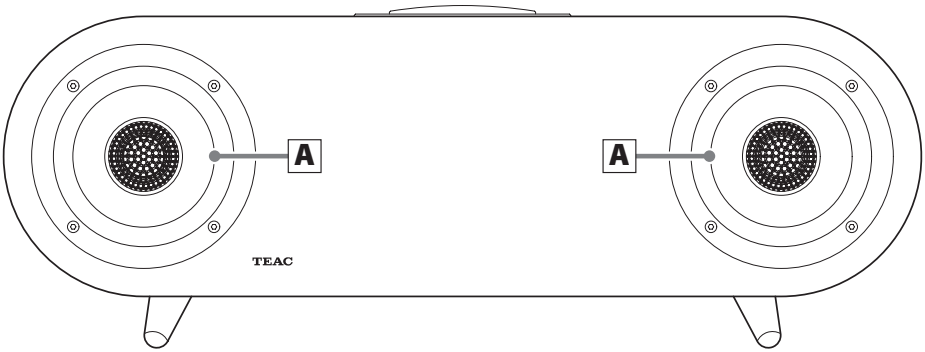

トップパネル

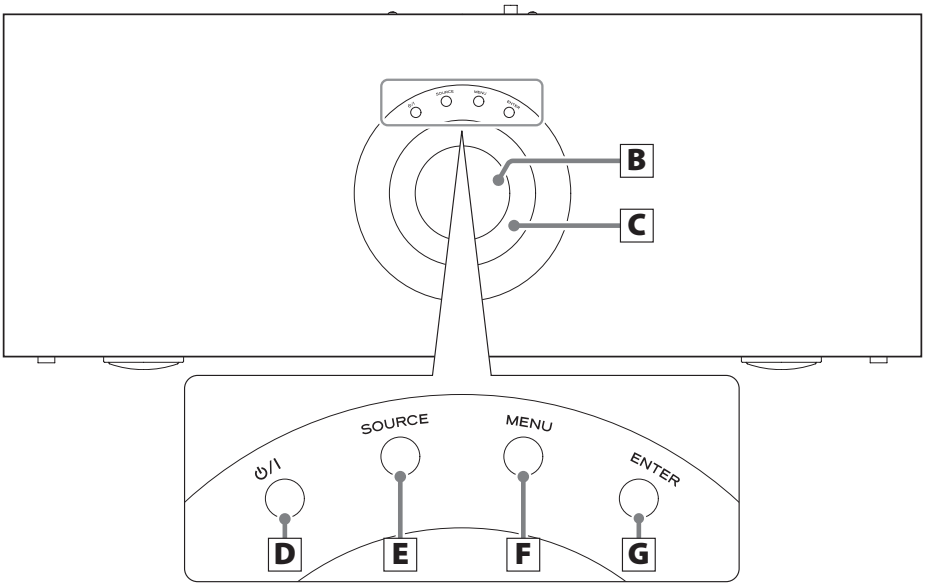

リアパネル

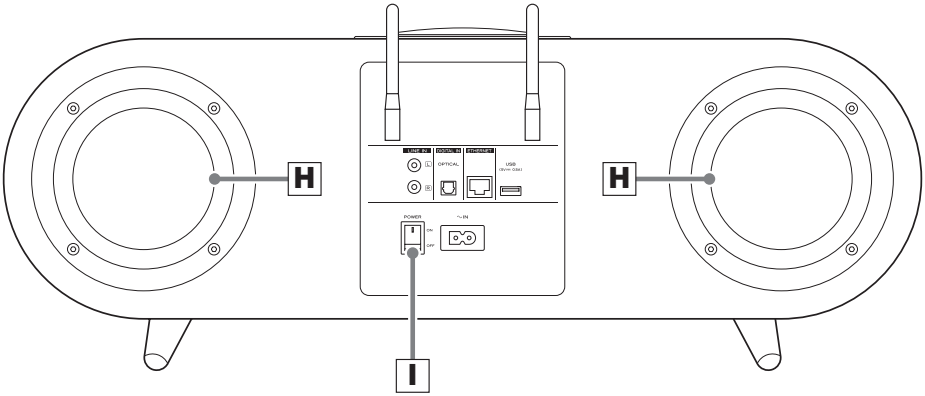

A 同軸 2 ウェイ スピーカー

音像の定位感に優れた同軸 2 ウェイユニットを採用しています。

B ディスプレー

音量、入力ソースやメニューを表示します。

C コントロールダイヤル

音量を調節します。時計回りに回すと大きくなり、反時計回りに回すと小さくなります。
また、各種設定操作にも使用します。

D スタンバイ / オンボタン (⏻/I)

電源をスタンバイ / オンします。(12 ページ)
電源がオンのときは、コントロールダイヤルの周囲が光ります。

E 入力切換ボタン (SOURCE)

入力ソースを切り換えます。(13 ページ)

F メニューボタン (MENU)

各種設定を行います。(22 ページ)

G エンターボタン (ENTER)

選択項目を確定します。

H パッシブラジエーター

主に低音を増強する働きをします。
前後に振動するので、ケーブルなど物が当たらないようにしてください。

I 主電源スイッチ (POWER)

電源をオン／オフします。

- 主電源スイッチがオンになっていないと、スタンバイ / オンボタン (⏻/I) を押しても電源がオンになりません。

主電源をオンにする

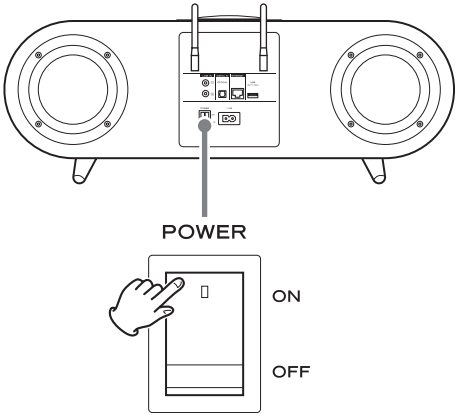

主電源スイッチ (POWER) をオンにするとディスプレーにプログレスバーが表示されて本体が起動します。起動するまで数十秒かかりますので、その間は他のボタンを触らずにお待ちください。本機が起動すると、以下のホーム画面が表示されます。

表示例



注意

主電源スイッチ (POWER) をオンにした直後は、音量が 50 に設定されます。

メモ

ご購入後すぐ、もしくは本機の設定をリセット（出荷状態）してから電源をオンにした場合、「Wi-Fi」がディスプレイに点滅表示されます。ただし、LAN ケーブル経由でネットワークに接続されている場合は、入力ソースに「ETHERNET」が表示されます。

電源をスタンバイまたはオンにする

電源がオンの状態で、スタンバイ / オンボタン (⏻/I) を押すと、スタンバイ (待機状態) になります。もう一度押すと、オンになります。

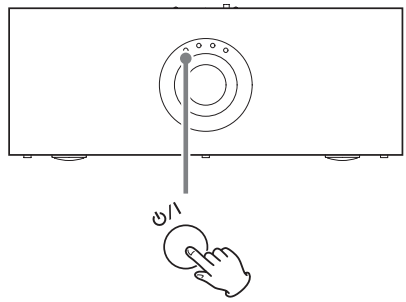

- 本機がスタンバイ状態のとき、アプリで再生を行うと自動で電源がオンになります。

メモ

本機はスタンバイの状態では、待機電力を消費します。待機電力をなくしたい場合は、リアパネルの主電源スイッチをオフにしてください。

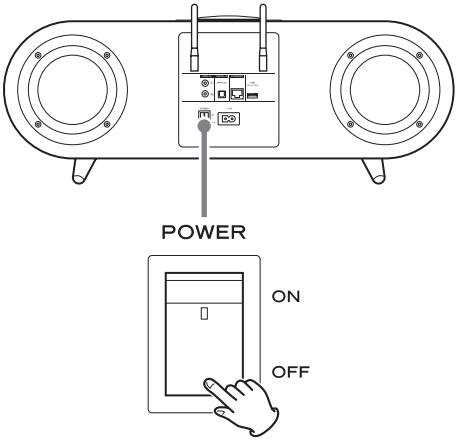

音量を調節する

ホーム画面を表示しているときに、コントロールダイヤルを回す。

表示例

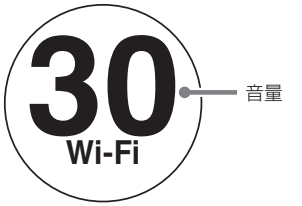

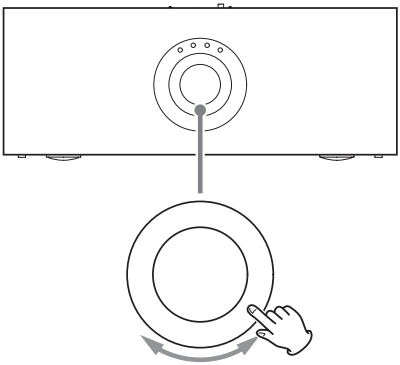

時計回りに回すと音が大きくなり、反時計回りに回すと音が小さくなります。
音量の値は、最小が 00、最大が 99 です。

入力ソースを選択する

1 入力切換ボタン (SOURCE) を押す。

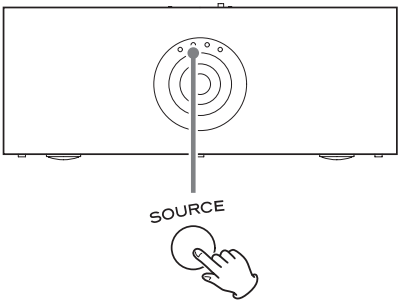

ディスプレーの表示が入力ソース選択画面に変わります。



2 コントロールダイヤルを回して、切り換える入力ソースをディスプレーの中央に表示させる。

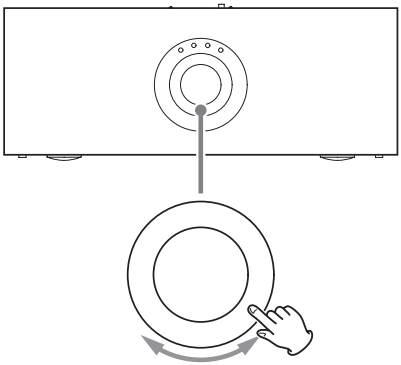

コントロールダイヤルを時計回りに回すと、入力ソースが以下の順番で変わります。

DIGITAL IN
↓
LINE IN

- 反時計回りに回すと、逆の順番で変わります。
- 1 分間操作しないと、入力ソースを変更せずにホーム画面に戻ります。

DIGITAL IN
本機リアパネルのデジタル音声入力を使用するときに選択します。

LINE IN
本機リアパネルのアナログ音声入力を使用するときに選択します。

メモ

Wi-Fi、ETHERNET、Bluetooth、および本機リアパネルの USB メモリを使用するときは、アプリで再生操作を行うことにより、自動的に入力ソースが切り換わります。

次のページへ続きます。➡

3 エンターボタン (ENTER) を押して、入力ソースを決定する。

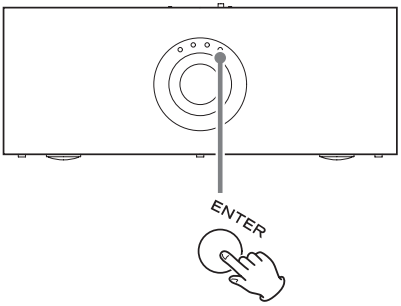

- ディスプレーに決定されたソースを数秒間表示したのち、自動的にホーム画面に戻ります。

  表示例



- エンターボタン (ENTER) を押す前に入力切換ボタン (SOURCE) を押すと、入力ソースの選択を中止します。

4 再生する。

再生操作については、15 ページの「本機でできること」を参照してください。

⚠ 注意

主電源スイッチ (POWER) または、スタンバイ / オンボタン (⏻/I) を押して、電源をオンにした直後や入力ソースを切り換えたときは、音量を最小にしてから再生を始め、徐々に音量を大きくして音量を調節してください。

オートパワーセーブについて

本機の電源がオンの状態で一定時間使用されなかったとき、自動的にスタンバイになります。
詳しくは、「設定」の「APS（オートパワーセーブ)」を参照してください。(23 ページ)

ディスプレーについて

本機のディスプレーは、焼き付き防止のため一定時間が経過すると自動的に消灯します。
詳しくは、「設定」の「DIMMER」を参照してください。(23 ページ)

本機でできること

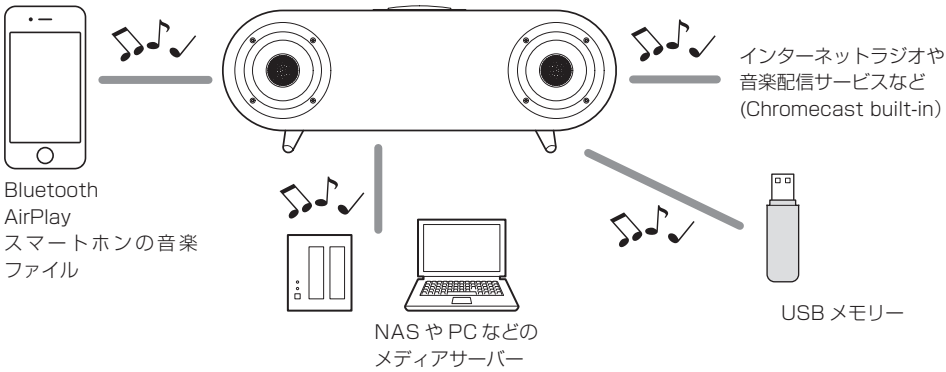

Bluetooth スピーカーとして使う (16 ページ)

AirPlay スピーカーとして使う *1 (21 ページ)

スマートホンやタブレットの音楽ファイルを聴く *1 *2

NAS や PC などのメディアサーバーの音楽ファイルを聴く *1 *2

USB メモリーの音楽ファイルを聴く *1 *2

インターネットラジオや音楽配信サービスなどの音声を聴く (Chromecast built-in) *1 *3

デジタルプレーヤーなどの音声を聴く (DIGITAL IN) *4 (21 ページ)

アナログプレーヤーなどの音声を聴く (LINE IN) *5 (21 ページ)

サポート情報

スマートホンやタブレットを使った詳しい操作方法は、取扱説明書「ネットワーク編」をご覧ください。
取扱説明書「ネットワーク編」は下記の TEAC ウェブサイトからダウンロードできます。

https://teac.jp/jp/product/ws-a70/download

Chromecast built-in について

Chromecast built-in を使うと、スマートホンやタブレット、パソコンからお気に入りの音楽をスピーカーにストリーミングすることができます。
iPhone や iPad、Android スマートホンやタブレット、Mac や Windows パソコン、Chromebook から、お好みのアプリを使って簡単にスピーカーを操作できます。

*1　本機をネットワークに接続する必要があります。
*2　スマートホンやタブレットに専用アプリ「TEAC HR AirCast」をインストールして操作します。
*3　ご利用のネットワークがインターネットに接続されている必要があります。
*4　CD プレーヤーや DAP (デジタルオーディオプレーヤー) など、光デジタル音声出力がある機器。
*5　テレビやフォノアンプ内蔵レコードプレーヤー（ライン出力）など、アナログ音声出力がある機器。

Bluetoothスピーカーとして使う

ペアリングする (初期設定)

- 本機を初めて使用する場合、または新たな Bluetooth 機器を初めて本機に接続する場合は、本機と Bluetooth 機器をペアリングする必要があります。
- Bluetooth 機器とのペアリングは、数 m の範囲内で行ってください。距離が離れすぎると、ペアリングやその後の接続ができなくなります。
- ご使用の Bluetooth 機器の取扱説明書もあわせてご覧ください。

1 MENU ボタンを押し、「PAIRING」を選択する。

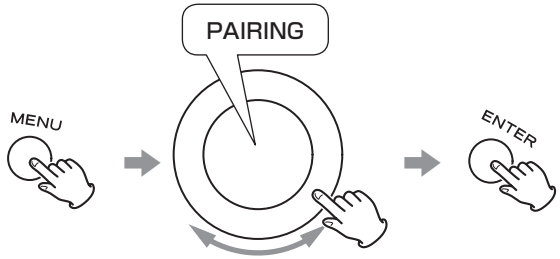

ディスプレーに「PAIRING」が点滅表示され、ペアリングが有効になります。

2 スマートホンなどの Bluetooth 機能をオンにする。

Android の例
「設定」>「Bluetooth」を開き、Bluetooth をオンにします。

iPhone の例
「設定」>「Bluetooth」を開き、Bluetooth をオンにします。

3 スマートホンなどの機器リストで、本機「WS-A70」を選択する .

Android の例
「設定」>「Bluetooth」の「使用可能な機器」リストから「WS-A70 xxxxxx」を選択します。

iPhone の例
「設定」>「Bluetooth」の「デバイス」リストから「WS-A70 xxxxxx」を選択します。

ペアリングが完了すると、ディスプレー下部に「Bluetooth」が点灯表示されます。



スマートホンなどの Bluetooth 機器で接続を確認してください。

Android の例
「設定」>「Bluetooth」の「ペアリングされた機器」を確認してください。

iPhone の例
「設定」>「Bluetooth」の「自分のデバイス」を確認してください。

メモ

- ペアリング操作は、1 でペアリングを有効にしてから5分以内に行ってください。
- ペアリングが完了しなかった場合は、1 から操作をやり直してください。また、ご使用の Bluetooth 機器の取扱説明書をご確認ください。

Bluetooth 機器を再生する

1 スマートホンなどの Bluetooth 機能をオンにし、本機「WS-A70」と接続する。

Android の例
「設定」>「Bluetooth」を開き、Bluetooth をオンにします。
「ペアリングされた機器」の「WS-A70 xxxxxx」を選択してステータスを「接続済み」にします。

iPhone の例
「設定」>「Bluetooth」を開き、Bluetooth をオンにします。
「デバイス」リストから「WS-A70 xxxxxx」を選択してステータスを「接続済み」にします。

接続が完了すると、ディスプレー下部に「Bluetooth」が表示されます。



メモ

- Bluetooth 機器との接続操作により、本機の入力ソースは自動的に Bluetooth に切り替わります。
- 接続が完了しない場合はペアリング操作をやり直すか、本機の主電源を入れ直して再度お試しください。また、ご使用の Bluetooth 機器の取扱説明書をご確認ください。

2 スマートホンなどの Bluetooth 機器で再生を行う

再生方法については、ご使用の Bluetooth 機器の取扱説明書をご覧ください。

TEAC HR AirCast をインストールする

専用アプリ「TEAC HR AirCast」を使って、スマートホンを本機のリモコンのようにご利用いただけます。
Google Play または App Store で「TEAC HR AirCast」を検索するか、または下記のアドレスからアクセスしてインストールしてください。

Google Play で手に入れよう

https://play.google.com/store/apps/details?id=com.teac.teachraircast

App Store からダウンロード

https://itunes.apple.com/us/app/teac-hr-aircast/id1204063749?l=ja&ls=1&mt=8

ネットワークに接続する

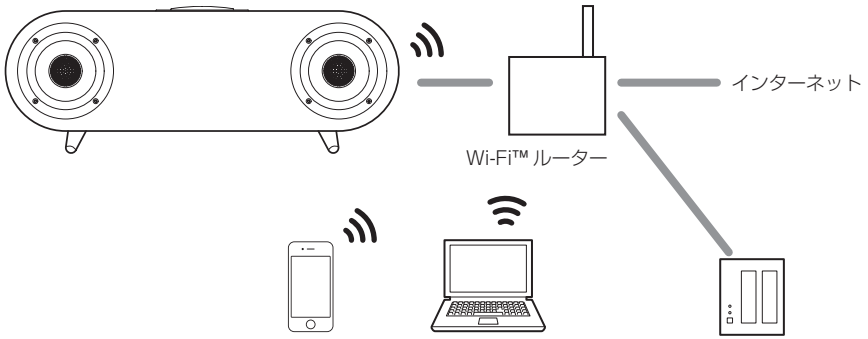

本機をネットワークに接続することにより、メディアサーバーの音楽を楽しんだり、インターネットラジオを聴いたりすることができます。
ネットワークに接続するには、次のようにいくつかの方法があります。

A) iPhone などの「新しい AIRPLAY スピーカーを設定…」を使う方法 (19 ページ)
iPhone の場合はこの方法が簡単です。

B) アプリ「Google Home」を使う方法
Android スマートホンなどの場合は、この方法を選択してください。詳しくは、取扱説明書「ネットワーク編」をご覧ください。

C) LAN ケーブルを使って接続する (20 ページ)
有線での接続は電波の状態に左右されないので、安定したネットワーク接続が可能です。

A) iPhone などの「新しい AIRPLAY スピーカーを設定…」を使う

1 本機の電源をオンにする。

2 MENU ボタンを押し、「Wi-Fi CONF」＞「iOS(WAC)」を選択する。

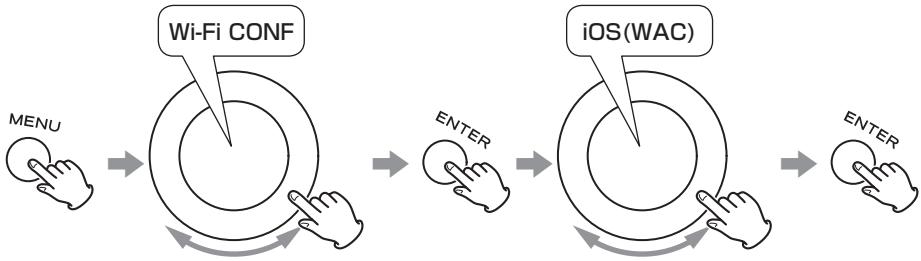

ディスプレーに「iOS(WAC)」が表示され、接続準備状態になります。



3 iPhone などの「設定」＞「Wi-Fi」を開く。

上にスワイプして「新しい AIRPLAY スピーカーを設定…」の項目で「WS-A70xxxxxx」を選択し、表示にしたがって接続設定を完了してください。

接続が完了すると、ディスプレー下部に「Wi-Fi」が点灯表示されます。



C) LAN ケーブルを使って接続する

1 本機の主電源スイッチ (POWER) をオフにする。

2 LAN ケーブルを接続する。

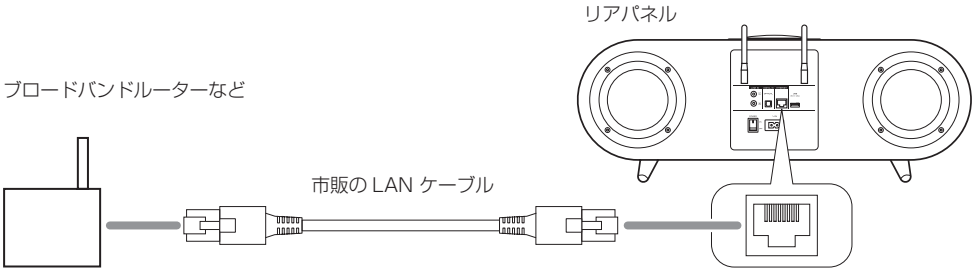

3 本機の主電源スイッチ (POWER) をオンにする。

本機が起動し接続が完了すると、ディスプレー下部に「ETHERNET」が表示されます。



メモ

LAN ケーブルを接続すると、本機の Wi-Fi 機能は無効になります。

1 iPhone/iPod などで音声出力先に本機を選択する

iPhone の例
画面の下を上にスワイプして、「コントロールセンター」を開き AirPlay アイコンをタップします。
一覧の中の「WS-A70 xxxxxx」をタップします。

メモ

AirPlay 使用時は、本機のディスプレー下部に「Wi-Fi」が表示されます。

2 ミュージックアプリなどで再生を行う。

デジタルプレーヤーなどの音声を聴く(DIGITAL IN)

1 入力切換ボタン (SOURCE) を押し、「DIGITAL IN」を選択する。

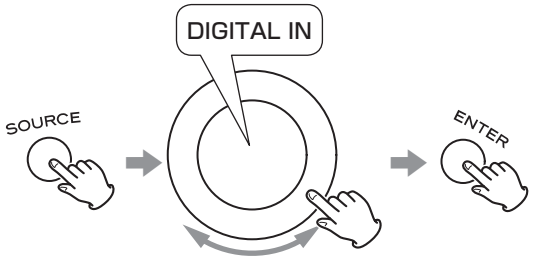

ディスプレー下部に「DIGITAL IN」が表示されます。



2 デジタルプレーヤーなどで再生を行う。

再生方法については、ご使用の機器の取扱説明書をご覧ください。

注意

本機は「リニア PCM」フォーマットにのみ対応しています。その他のフォーマットの信号を入力すると、音が出なかったり、ノイズが出ることがあります。その場合は、ご使用の機器の出力を「リニア PCM」に設定してください。詳しくは、ご使用の機器の取扱説明書をご覧ください。

アナログプレーヤーなどの音声を聴く(LINE IN)

1 入力切換ボタン (SOURCE) を押し、「LINE IN」を選択する。

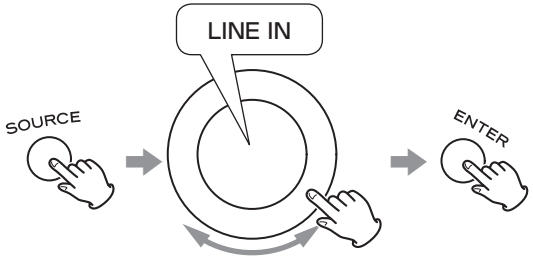

ディスプレー下部に「LINE IN」が表示されます。



2 アナログプレーヤーなどで再生を行う。

再生方法については、ご使用の機器の取扱説明書をご覧ください。

設定

本機の設定項目は、以下の手順で変更することができます。

- 設定は、電源をスタンバイまたは主電源スイッチ (POWER) をオフにしても保持されます。

1 メニューボタン (MENU) を押して、メニュー画面を表示する。

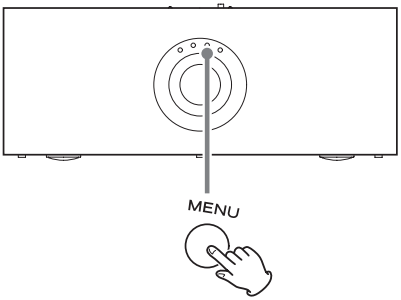

表示例

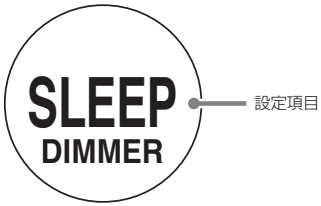

2 コントロールダイヤルを回して、設定する項目を中央に表示させる。

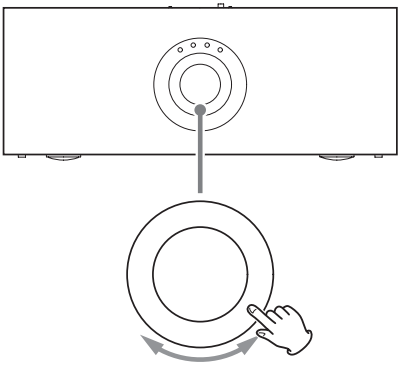

コントロールダイヤルを時計回りに回すと、入力ソースが以下の順番で変わります。

SLEEP
↓
DIMMER
↓
APS
↓
PS-MODE
↓
BASS EQ
↓
Wi-Fi CONF
↓
PAIRING
↓
INFORMATION
↓
RESET

- 反時計回りに回すと、逆の順番で変わります。

3 エンターボタン (ENTER) を押して、設定項目の選択肢を表示させる。

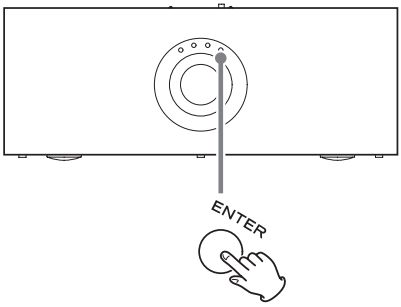

表示例

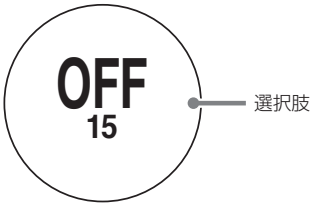

4 コントロールダイヤルを回して、設定値を選択し、エンターボタン (ENTER) を押して決定する。

メニューボタン (MENU) を押すと、設定をキャンセルして、ホーム画面に戻ります。

各設定項目の内容は、以下の通りです。

SLEEP(スリープ)

スリープタイマーを設定します。

OFF
スリープタイマーを無効にします。

15, 30, 45, 60, 90, 120 (分)
設定した時間が経過すると、スタンバイになります。

スリープタイマーが設定されている場合には、ホーム画面に「タイマーの残り時間」が表示されます。

表示例



- スリープタイマーを再設定するには、メニューボタン (MENU) を押して、もう一度設定し直してください。

DIMMER (ディマー)

ディスプレーの明るさを設定します。

DIM 3
通常

DIM 2
やや暗い

DIM 1
暗い

DIM 0
さらに暗い

メモ

ディスプレーは、操作後 3 分で消灯しますが、DIM 0 に設定すると操作後 3 秒で消灯します。

APS(オートパワーセーブ)

本機を 20 分間使用しないとき、自動でスタンバイ状態にすることができます。

OFF
オートパワーセーブ無効

ON
オートパワーセーブ有効

メモ

以下の条件が満たされたときに、自動でスタンバイ状態になります。

- 本機が 20 分間操作されていない。
- 入力ソースによる条件
  REMOTE(Wi-Fi , Bluetooth, ETHERNET, USB) のとき
  停止または一時停止の状態が 20 分継続する
  DIGITAL IN のとき
  音声入力がない状態が 20 分継続する
  LINE IN のとき
  音声入力がない状態が 20 分継続する

PS-MODE(パワーセーブモード)

スタンバイ状態における、パワーセーブの動作を設定します。

PS1
本機内のパワーアンプ部の電源をオフにして、スタンバイ時の消費電力を下げます。
スマートホンやタブレットで再生を開始したり、DIGITAL IN、LINE IN に音声入力があると、電源がオンになります。

PS2
本機のほとんどのモジュールの電源をオフにして、PS1 よりスタンバイ時の消費電力を下げます。スマートホンやタブレットで再生を開始すると、電源がオンになります。DIGITAL IN および LINE IN に音声が入力されても電源はオンになりません。

BASS EQ (バス イコライザー)

低音の音量を調節します。

FLAT
　低音を増強しません。

ENHANCED
　低音を増強します。小音量時など、低音が不足しているときに使用してください。

Wi-Fi CONF(Wi-Fi 設定)

本機を Wi-Fi ルーターなどのアクセスポイントに接続する設定を行います。

iOS (WAC)

Mac または iPhone などの iOS デバイスの機能を使用して、本機を Wi-Fi アクセスポイントに接続するときに使用します。
詳しい操作方法は、19 ページの「A) iPhone などの「新しい AIRPLAY スピーカーを設定…」を使う」を参照してください。

PAIRING (ペアリング)

Bluetooth 機器と本機の接続設定をします。
ペアリングの方法については、16 ページの「ペアリングする (初期設定)」を参照してください。

INFORMATION(インフォメーション)

本機の情報を表示します。

コントロールダイヤルを時計回りに回すと、以下の順番で表示が変わります。

VERSION
⬇
VERSION (続き)
⬇
IP ADR
⬇
Wi-Fi MAC ADR
⬇
ETHER MAC ADR
⬇
SPK NAME

- コントロールダイヤルを反時計回りに回すと、逆の順番で変わります。

各情報の内容は以下の通りです。

VERSION
　本機のファームウエアのバージョンを表示します。
　SYS
　　メインファームウエアのバージョン
　N
　　ネットワークモジュールのファームウェアのバージョン
　CAST
　　Chromecast built-in モジュールのファームウェアのバージョン

IP ADR
　IP アドレス

Wi-Fi MAC ADR
　Wi-Fi の MAC アドレス

ETHER MAC ADR
　Ethernet の MAC アドレス

SPK NAME
　アプリで設定されたスピーカー名

RESET (リセット)

本機の設定を工場出荷時の状態にします。

1 **RESET が表示されているときにエンターボタン (ENTER) を押す。**

2 **SURE? が表示されたらエンターボタン (ENTER) を押す。**



(「本当にいいですか?」という意味)

「PleaseWait」と表示し、初期化処理が終了すると、本機が再起動します。



(「しばらくお待ちください」の意味)

- 中止する場合は、メニューボタン (MENU) を押してください。

注意

本機の設定を工場出荷時の状態にすると、Wi-Fi の接続設定や Bluetooth のペアリング設定を含む、すべての設定がリセットされます。
必要に応じて設定をやり直してください。

困ったときは

本機の調子がおかしいときは、サービスを依頼される前に以下の内容をもう一度チェックしてください。それでも正常に動作しない場合は、お買い上げの販売店またはティアック修理センター (裏表紙に記載) にご連絡ください。

一般

電源が入らない

- ➡ 電源コードがきちんと電源に接続されているか、差し込みが不完全ではないかを確認してください。コンセントがスイッチ式の場合、オンになっているか確認してください。
- ➡ リアパネルの主電源スイッチ (POWER) がオンになっているか確認してください。(11 ページ)
- ➡ コンセントに他の電気機器を接続して、電気が供給されているかを確かめてください。
- ➡ オートパワーセーブ機能でスタンバイ状態になっている場合は、スタンバイ / オンボタン (⏻/I) を押すと電源がオンになります。

音が出ない

- ➡ コントロールダイヤルを回して音量を調節してください。右側に回すと音量が上がります。(13 ページ)
- ➡ 入力切換ボタン (SOURCE) で聴きたいソースを選んでください。
- ➡ 外部機器の接続をもう一度確認してください。

ブーンというノイズが聞こえる

- ➡ 接続ケーブルの近くに電源コードや蛍光灯等がある場合は、本機からできるだけ遠ざけてください。

急に音が出なくなった

- ➡ 発熱により保護回路が動作したと考えられます。

  主電源スイッチ (POWER) を押して電源をオフにし、数分経ってから再度電源をオンにして下さい。

Bluetooth

接続する Bluetooth 機器を変更できない

- ➡ 本機は複数の機器と同時に Bluetooth 接続することができません。

  本機と Bluetooth 接続する機器を変更するには、本機と接続中の Bluetooth 機器の接続を切ってから別の Bluetooth 機器と接続してください。

本機はマイコンを使用しておりますので、外部からの雑音やノイズ等によって正常な動作をしなくなることがあります。このような場合は一旦電源プラグをコンセントから抜き、しばらくしてから再び電源を入れて操作しなおしてください。

アンプ部

最大出力. . 26 W + 26 W (JEITA, 10 % 歪 , 6 Ω)
定格出力. . . 21 W + 21 W (JEITA, 1 % 歪 , 6 Ω)

スピーカー部

形式 . . . . . パッシブラジエーター方式
フロント. . . . . 同軸2ウェイ × 2
低音用. . . . . 13cm ペーパーコーン型
高音用. . . . . 2.5cm チタンドーム型
リア . . . . . 13cm パッシブラジエーター × 2
再生周波数帯域. . . . . 55 Hz ～ 45 KHz

Bluetooth 部

Bluetooth バージョン 4.1
出力 Class2
対応プロファイル . . . . . A2DP, AVRCP
コーデック . . . . . SBC, AAC

USB 部

対応 USB 機器 . USB マスストレージデバイスクラス
インターフェース . . . . . USB2.0 (High speed)
ファイルシステム . . . . . FAT, FAT32, NTFS
USB 出力電圧 . . . . . DC 5 V
USB 供給電流 . . . . . 最大 500 mA

ネットワーク部

イーサネット . . . . . 100 BASE-T
無線 LAN 規格 . . . . IEEE 802.11 a/b/g/n/ac 準拠
周波数帯域 . . . . . 2.4 GHz, 5 GHz
セキュリティ WEP 64&128 bit, WPA, WPA-PSK, WPA2, WPA2-PSK, IEEE 802.11i

音楽再生フォーマット & プロトコル

AAC LC, HE-AACv1/v2,
FLAC (～ 192kHz/24bit),
MP3, Vorbis,
PCM/WAVE (～ 192kHz/24bit),
ALAC, HTTP/1.1 Audio Transport,
DSD 2.8 MHz/5.6 MHz

デジタル音声入力

デジタル音声入力端子. . . . . OPTICAL (角型) × 1
対応フォーマット . . . IEC-60958-3 (S/PDIF 準拠)
対応サンプリング周波数
44.1, 48, 88.2, 96, 176.4, 192 kHz
対応ビット数 . . . . . 16/24 ビット

アナログ音声入力

アナログ音声入力端子. . . . . RCA × 1 系統 (L/R)
最大入力レベル. . . . . 2.0 Vrms
入力インピーダンス . . . . . 20 k Ω

一般

電源 . . . . . AC 100V, 50/60Hz
消費電力. . . . . 35 W
外形寸法 (幅、高さ、奥行) 590 x 221 x 235 mm (突起部含む)
質量 . . . . . 10 kg

付属品

電源コード × 1
無線 LAN アンテナ × 2
取扱説明書 (本書、保証書付き) × 1
クイックスタートガイド × 1

- 仕様及び外観は改善のため予告なく変更することがあります。
- 取扱説明書のイラストが一部製品と異なる場合があります。

ソフトウェアに関する重要なお知らせ

本製品に搭載されるソフトウェアには、ティアック株式会社（以下「弊社」とします）が第三者より直接的に又は間接的に使用の許諾を受けたソフトウェアが含まれております。これらのソフトウェアに関する本お知らせを必ずご一読くださいますようお願い申しあげます。

GNU GPL/LGPL適用ソフトウェアに関するお知らせ

本製品には、以下の GNU General Public License(以下「GPL」とします) または GNU Lesser General Public License(以下「LGPL」とします) の適用を受けるソフトウェアが含まれております。
お客様は添付の GPL/LGPL の条件に従いこれらのソフトウェアのソースコードの入手、改変、再配布の権利があることをお知らせいたします。

パッケージリスト

SACD decoder plugin - LGPL v2
Linux kernel - GPL v2
libgccdemangle.so - GPL v2

ソースコードの入手をご希望されるお客様は、以下の URL にアクセスの上、登録フォームからご要求ください。

http://www.teac.co.jp/support/opensource/index.html

なお、ソースコードの内容等についてのご質問はお答えできませんので、あらかじめご了承ください。

Notices for Linux kernel:

NOTE! This copyright does *not* cover user programs that use kernel services by normal system calls - this is merely considered normal use of the kernel, and does *not* fall under the heading of "derived work".

Also note that the GPL below is copyrighted by the Free Software Foundation, but the instance of code that it refers to (the linux kernel) is copyrighted by me and others who actually wrote it.

Linus Torvalds

Notices for libgccdemangle.so:

Copyright (C) 1989, 1991 Free Software Foundation, Inc.
51 Franklin Street, Fifth Floor, Boston, MA 02110-1301 USA
Everyone is permitted to copy and distribute verbatim copies
of this license document, but changing it is not allowed.

以下、GNU GENERAL PUBLIC LICENSE、および、GNU LIBRARY GENERAL PUBLIC LICENSE の原文を記載します。

GNU LIBRARY GENERAL PUBLIC LICENSE

Version 2, June 1991
Copyright (C) 1991 Free Software Foundation, Inc.
51 Franklin St, Fifth Floor, Boston, MA 02110-1301, USA
Everyone is permitted to copy and distribute verbatim copies
of this license document, but changing it is not allowed.

[This is the first released version of the library GPL. It is
numbered 2 because it goes with version 2 of the ordinary GPL.]

Preamble

The licenses for most software are designed to take away your freedom to share and change it. By contrast, the GNU General Public Licenses are intended to guarantee your freedom to share and change free software--to make sure the software is free for all its users.

This license, the Library General Public License, applies to some specially designated Free Software Foundation software, and to any other libraries whose authors decide to use it. You can use it for your libraries, too.

When we speak of free software, we are referring to freedom, not price. Our General Public Licenses are designed to make sure that you have the freedom to distribute copies of free software (and charge for this service if you wish), that you receive source code or can get it if you want it, that you can change the software or use pieces of it in new free programs; and that you know you can do these things.

To protect your rights, we need to make restrictions that forbid anyone to deny you these rights or to ask you to surrender the rights. These restrictions translate to certain responsibilities for you if you distribute copies of the library, or if you modify it.

For example, if you distribute copies of the library, whether gratis or for a fee, you must give the recipients all the rights that we gave you. You must make sure that they, too, receive or can get the source code. If you link a program with the library, you must provide complete object files to the recipients so that they can relink them with the library, after making changes to the library and recompiling it. And you must show them these terms so they know their rights.

Our method of protecting your rights has two steps: (1) copyright the library, and (2) offer you this license which gives you legal permission to copy, distribute and/or modify the library.

Also, for each distributor's protection, we want to make certain that everyone understands that there is no warranty for this free library. If the library is modified by someone else and passed on, we want its recipients to know that what they have is not the original version, so that any problems introduced by others will not reflect on the original authors' reputations.

Finally, any free program is threatened constantly by software patents. We wish to avoid the danger that companies distributing free software will individually obtain patent licenses, thus in effect transforming the program into proprietary software. To prevent this, we have made it clear that any patent must be licensed for everyone's free use or not licensed at all.

Most GNU software, including some libraries, is covered by the ordinary GNU General Public License, which was designed for utility programs. This license, the GNU Library General Public License, applies to certain designated libraries.

This license is quite different from the ordinary one; be sure to read it in full, and don't assume that anything in it is the same as in the ordinary license.

The reason we have a separate public license for some libraries is that they blur the distinction we usually make between modifying or adding to a program and simply using it. Linking a program with a library, without changing the library, is in some sense simply using the library, and is analogous to running a utility program or application program. However, in a textual and legal sense, the linked executable is a combined work, a derivative of the original library, and the ordinary General Public License treats it as such.

Because of this blurred distinction, using the ordinary General Public License for libraries did not effectively promote software sharing, because most developers did not use the libraries. We concluded that weaker conditions might promote sharing better.

However, unrestricted linking of non-free programs would deprive the users of those programs of all benefit from the free status of the libraries themselves. This Library General Public License is intended to permit developers of non-free programs to use free libraries, while preserving your freedom as a user of such programs to change the free libraries that are incorporated in them. (We have not seen how to achieve this as regards changes in header files, but we have achieved it as regards changes in the actual functions of the Library.) The hope is that this will lead to faster development of free libraries.

The precise terms and conditions for copying, distribution and modification follow. Pay close attention to the difference between a "work based on the library" and a "work that uses the library". The former contains code derived from the library, while the latter only works together with the library.

Note that it is possible for a library to be covered by the ordinary General Public License rather than by this special one.

TERMS AND CONDITIONS FOR COPYING, DISTRIBUTION AND MODIFICATION

0. This License Agreement applies to any software library which contains a notice placed by the copyright holder or other authorized party saying it may be distributed under the terms of this Library General Public License (also called "this License"). Each licensee is addressed as "you".

A "library" means a collection of software functions and/or data prepared so as to be conveniently linked with application programs (which use some of those functions and data) to form executables.

The "Library", below, refers to any such software library or work which has been distributed under these terms. A "work based on the Library" means either the Library or any derivative work under copyright law: that is to say, a work containing the Library or a portion of it, either verbatim or with modifications and/or translated straightforwardly into another language. (Hereinafter, translation is included without limitation in the term "modification".)

Source code for a work means the preferred form of the work for making modifications to it. For a library, complete source code means all the source code for all modules it contains, plus any associated interface definition files, plus the scripts used to control compilation and installation of the library.

Activities other than copying, distribution and modification are not covered by this License; they are outside its scope. The act of running a program using the Library is not restricted, and output from such a program is covered only if its contents constitute a work based on the Library (independent of the use of the Library in a tool for writing it). Whether that is true depends on what the Library does and what the program that uses the Library does.

1. You may copy and distribute verbatim copies of the Library's complete source code as you receive it, in any medium, provided that you conspicuously and appropriately publish on each copy an appropriate copyright notice and disclaimer of warranty; keep intact all the notices that refer to this License and to the absence of any warranty; and distribute a copy of this License along with the Library.

You may charge a fee for the physical act of transferring a copy, and you may at your option offer warranty protection in exchange for a fee.

2. You may modify your copy or copies of the Library or any portion of it, thus forming a work based on the Library, and copy and distribute such modifications or work under the terms of Section 1 above, provided that you also meet all of these conditions:

a) The modified work must itself be a software library.
b) You must cause the files modified to carry prominent notices stating that you changed the files and the date of any change.
c) You must cause the whole of the work to be licensed at no charge to all third parties under the terms of this License.
d) If a facility in the modified Library refers to a function or a table of data to be supplied by an application program that uses the facility, other than as an argument passed when the facility is invoked, then you must make a good faith effort to ensure that, in the event an application does not supply such function or table, the facility still operates, and performs whatever part of its purpose remains meaningful.
(For example, a function in a library to compute square roots has a purpose that is entirely well-defined independent of the application. Therefore, Subsection 2d requires that any application-supplied function or table used by this function must be optional: if the application does not supply it, the square root function must still compute square roots.)

These requirements apply to the modified work as a whole. If identifiable sections of that work are not derived from the Library, and can be reasonably considered independent and separate works in themselves, then this License, and its terms, do not apply to those sections when you distribute them as separate works. But when you distribute the same sections as part of a whole which is a work based on the Library, the distribution of the whole must be on the terms of this License, whose permissions for other licensees extend to the entire whole, and thus to each and every part regardless of who wrote it.

Thus, it is not the intent of this section to claim rights or contest your rights to work written entirely by you; rather, the intent is to exercise the right to control the distribution of derivative or collective works based on the Library.

In addition, mere aggregation of another work not based on the Library with the Library (or with a work based on the Library) on a volume of a storage or distribution medium does not bring the other work under the scope of this License.

3. You may opt to apply the terms of the ordinary GNU General Public License instead of this License to a given copy of the Library. To do this, you must alter all the notices that refer to this License, so that they refer to the ordinary GNU General Public License, version 2, instead of to this License. (If a newer version than version 2 of the ordinary GNU General Public License has appeared, then you can specify that version instead if you wish.) Do not make any other change in these notices.

Once this change is made in a given copy, it is irreversible for that copy, so the ordinary GNU General Public License applies to all subsequent copies and derivative works made from that copy.

This option is useful when you wish to copy part of the code of the Library into a program that is not a library.

4. You may copy and distribute the Library (or a portion or derivative of it, under Section 2) in object code or executable form under the terms of Sections 1 and 2 above provided that you accompany it with the complete corresponding machine-readable source code, which must be distributed under the terms of Sections 1 and 2 above on a medium customarily used for software interchange.

If distribution of object code is made by offering access to copy from a designated place, then offering equivalent access to copy the source code

from the same place satisfies the requirement to distribute the source code, even though third parties are not compelled to copy the source along with the object code.

5. A program that contains no derivative of any portion of the Library, but is designed to work with the Library by being compiled or linked with it, is called a "work that uses the Library". Such a work, in isolation, is not a derivative work of the Library, and therefore falls outside the scope of this License.

However, linking a "work that uses the Library" with the Library creates an executable that is a derivative of the Library (because it contains portions of the Library), rather than a "work that uses the library". The executable is therefore covered by this License. Section 6 states terms for distribution of such executables.

When a "work that uses the Library" uses material from a header file that is part of the Library, the object code for the work may be a derivative work of the Library even though the source code is not. Whether this is true is especially significant if the work can be linked without the Library, or if the work is itself a library. The threshold for this to be true is not precisely defined by law.

If such an object file uses only numerical parameters, data structure layouts and accessors, and small macros and small inline functions (ten lines or less in length), then the use of the object file is unrestricted, regardless of whether it is legally a derivative work. (Executables containing this object code plus portions of the Library will still fall under Section 6.)

Otherwise, if the work is a derivative of the Library, you may distribute the object code for the work under the terms of Section 6. Any executables containing that work also fall under Section 6, whether or not they are linked directly with the Library itself.

6. As an exception to the Sections above, you may also compile or link a "work that uses the Library" with the Library to produce a work containing portions of the Library, and distribute that work under terms of your choice, provided that the terms permit modification of the work for the customer's own use and reverse engineering for debugging such modifications.

You must give prominent notice with each copy of the work that the Library is used in it and that the Library and its use are covered by this License. You must supply a copy of this License. If the work during execution displays copyright notices, you must include the copyright notice for the Library among them, as well as a reference directing the user to the copy of this License. Also, you must do one of these things:

a) Accompany the work with the complete corresponding machine-readable source code for the Library including whatever changes were used in the work (which must be distributed under Sections 1 and 2 above); and, if the work is an executable linked with the Library, with the complete machine-readable "work that uses the Library", as object code and/or source code, so that the user can modify the Library and then relink to produce a modified executable containing the modified Library. (It is understood that the user who changes the contents of definitions files in the Library will not necessarily be able to recompile the application to use the modified definitions.)

b) Accompany the work with a written offer, valid for at least three years, to give the same user the materials specified in Subsection 6a, above, for a charge no more than the cost of performing this distribution.

c) If distribution of the work is made by offering access to copy from a designated place, offer equivalent access to copy the above specified materials from the same place.

d) Verify that the user has already received a copy of these materials or that you have already sent this user a copy.

For an executable, the required form of the "work that uses the Library" must include any data and utility programs needed for reproducing the executable from it. However, as a special exception, the source code distributed need not include anything that is normally distributed (in either source or binary form) with the major components (compiler, kernel, and so on) of the operating system on which the executable runs, unless that component itself accompanies the executable.

It may happen that this requirement contradicts the license restrictions of other proprietary libraries that do not normally accompany the operating system. Such a contradiction means you cannot use both them and the Library together in an executable that you distribute.

7. You may place library facilities that are a work based on the Library side-by-side in a single library together with other library facilities not covered by this License, and distribute such a combined library, provided that the separate distribution of the work based on the Library and of the other library facilities is otherwise permitted, and provided that you do these two things:

a) Accompany the combined library with a copy of the same work based on the Library, uncombined with any other library facilities. This must be distributed under the terms of the Sections above.

b) Give prominent notice with the combined library of the fact that part of it is a work based on the Library, and explaining where to find the accompanying uncombined form of the same work.

8. You may not copy, modify, sublicense, link with, or distribute the Library except as expressly provided under this License. Any attempt otherwise to copy, modify, sublicense, link with, or distribute the Library is void, and will automatically terminate your rights under this License. However, parties who have received copies, or rights, from you under this License will not have their licenses terminated so long as such parties remain in full compliance.

9. You are not required to accept this License, since you have not signed it. However, nothing else grants you permission to modify or distribute the Library or its derivative works. These actions are prohibited by law if you do not accept this License. Therefore, by modifying or distributing the Library (or any work based on the Library), you indicate your acceptance of this License to do so, and all its terms and conditions for copying, distributing or modifying the Library or works based on it.

10. Each time you redistribute the Library (or any work based on the Library), the recipient automatically receives a license from the original licensor to copy, distribute, link with or modify the Library subject to these terms and conditions. You may not impose any further restrictions on the recipients' exercise of the rights granted herein. You are not responsible for enforcing compliance by third parties to this License.

11. If, as a consequence of a court judgment or allegation of patent infringement or for any other reason (not limited to patent issues), conditions are imposed on you (whether by court order, agreement or otherwise) that contradict the conditions of this License, they do not excuse you from the conditions of this License. If you cannot distribute so as to satisfy simultaneously your obligations under this License and any other pertinent obligations, then as a consequence you may not distribute the Library at all. For example, if a patent license would not permit royalty-free redistribution of the Library by all those who receive copies directly or indirectly through you, then the only way you could satisfy both it and this License would be to refrain entirely from distribution of the Library.

If any portion of this section is held invalid or unenforceable under any particular circumstance, the balance of the section is intended to apply, and the section as a whole is intended to apply in other circumstances.

It is not the purpose of this section to induce you to infringe any patents or other property right claims or to contest validity of any such claims; this section has the sole purpose of protecting the integrity of the free software distribution system which is implemented by public license practices. Many people have made generous contributions to the wide range of software distributed through that system in reliance on consistent application of that system; it is up to the author/donor to decide if he or she is willing to distribute software through any other system and a licensee cannot impose that choice.

This section is intended to make thoroughly clear what is believed to be a consequence of the rest of this License.

12. If the distribution and/or use of the Library is restricted in certain countries either by patents or by copyrighted interfaces, the original copyright holder who places the Library under this License may add an explicit geographical distribution limitation excluding those countries, so that distribution is

permitted only in or among countries not thus excluded. In such case, this License incorporates the limitation as if written in the body of this License.

13. The Free Software Foundation may publish revised and/or new versions of the Library General Public License from time to time. Such new versions will be similar in spirit to the present version, but may differ in detail to address new problems or concerns.

Each version is given a distinguishing version number. If the Library specifies a version number of this License which applies to it and "any later version", you have the option of following the terms and conditions either of that version or of any later version published by the Free Software Foundation. If the Library does not specify a license version number, you may choose any version ever published by the Free Software Foundation.

14. If you wish to incorporate parts of the Library into other free programs whose distribution conditions are incompatible with these, write to the author to ask for permission. For software which is copyrighted by the Free Software Foundation, write to the Free Software Foundation; we sometimes make exceptions for this. Our decision will be guided by the two goals of preserving the free status of all derivatives of our free software and of promoting the sharing and reuse of software generally.

NO WARRANTY

15. BECAUSE THE LIBRARY IS LICENSED FREE OF CHARGE, THERE IS NO WARRANTY FOR THE LIBRARY, TO THE EXTENT PERMITTED BY APPLICABLE LAW. EXCEPT WHEN OTHERWISE STATED IN WRITING THE COPYRIGHT HOLDERS AND/OR OTHER PARTIES PROVIDE THE LIBRARY "AS IS" WITHOUT WARRANTY OF ANY KIND, EITHER EXPRESSED OR IMPLIED, INCLUDING, BUT NOT LIMITED TO, THE IMPLIED WARRANTIES OF MERCHANTABILITY AND FITNESS FOR A PARTICULAR PURPOSE. THE ENTIRE RISK AS TO THE QUALITY AND PERFORMANCE OF THE LIBRARY IS WITH YOU. SHOULD THE LIBRARY PROVE DEFECTIVE, YOU ASSUME THE COST OF ALL NECESSARY SERVICING, REPAIR OR CORRECTION.

16. IN NO EVENT UNLESS REQUIRED BY APPLICABLE LAW OR AGREED TO IN WRITING WILL ANY COPYRIGHT HOLDER, OR ANY OTHER PARTY WHO MAY MODIFY AND/OR REDISTRIBUTE THE LIBRARY AS PERMITTED ABOVE, BE LIABLE TO YOU FOR DAMAGES, INCLUDING ANY GENERAL, SPECIAL, INCIDENTAL OR CONSEQUENTIAL DAMAGES ARISING OUT OF THE USE OR INABILITY TO USE THE LIBRARY (INCLUDING BUT NOT LIMITED TO LOSS OF DATA OR DATA BEING RENDERED INACCURATE OR LOSSES SUSTAINED BY YOU OR THIRD PARTIES OR A FAILURE OF THE LIBRARY TO OPERATE WITH ANY OTHER SOFTWARE), EVEN IF SUCH HOLDER OR OTHER PARTY HAS BEEN ADVISED OF THE POSSIBILITY OF SUCH DAMAGES.

END OF TERMS AND CONDITIONS

How to Apply These Terms to Your New Libraries

If you develop a new library, and you want it to be of the greatest possible use to the public, we recommend making it free software that everyone can redistribute and change. You can do so by permitting redistribution under these terms (or, alternatively, under the terms of the ordinary General Public License).

To apply these terms, attach the following notices to the library. It is safest to attach them to the start of each source file to most effectively convey the exclusion of warranty; and each file should have at least the "copyright" line and a pointer to where the full notice is found.

one line to give the library's name and an idea of what it does.
Copyright (C) year name of author

This library is free software; you can redistribute it and/or
modify it under the terms of the GNU Library General Public
License as published by the Free Software Foundation; either
version 2 of the License, or (at your option) any later version.

This library is distributed in the hope that it will be useful,
but WITHOUT ANY WARRANTY; without even the implied warranty of
MERCHANTABILITY or FITNESS FOR A PARTICULAR PURPOSE. See the GNU
Library General Public License for more details.

You should have received a copy of the GNU Library General Public
License along with this library; if not, write to the
Free Software Foundation, Inc., 51 Franklin St, Fifth Floor,
Boston, MA 02110-1301, USA.

Also add information on how to contact you by electronic and paper mail.

You should also get your employer (if you work as a programmer) or your school, if any, to sign a "copyright disclaimer" for the library, if necessary. Here is a sample; alter the names:

Yoyodyne, Inc., hereby disclaims all copyright interest in
the library `Frob' (a library for tweaking knobs) written
by James Random Hacker.

signature of Ty Coon, 1 April 1990
Ty Coon, President of Vice

That's all there is to it!

GNU GENERAL PUBLIC LICENSE

Version 2, June 1991

Copyright (C) 1989, 1991 Free Software Foundation, Inc.59
Temple Place - Suite 330, Boston, MA 02111-1307, USA

Everyone is permitted to copy and distribute verbatim copies of this license document, but changing it is not allowed.

Preamble

The licenses for most software are designed to take away your freedom to share and change it. By contrast, the GNU General Public License is intended to guarantee your freedom to share and change free software--to make sure the software is free for all its users. This General Public License applies to most of the Free Software Foundation's software and to any other program whose authors commit to using it. (Some other Free Software Foundation software is covered by the GNU Library General Public License instead.) You can apply it to your programs, too.

When we speak of free software, we are referring to freedom, not price. Our General Public Licenses are designed to make sure that you have the freedom to distribute copies of free software (and charge for this service if you wish), that you receive source code or can get it if you want it, that you can change the software or use pieces of it in new free programs; and that you know you can do these things.

To protect your rights, we need to make restrictions that forbid anyone to deny you these rights or to ask you to surrender the rights. These restrictions translate to certain responsibilities for you if you distribute copies of the software, or if you modify it.

For example, if you distribute copies of such a program, whether gratis or for a fee, you must give the recipients all the rights that you have. You must make

sure that they, too, receive or can get the source code. And you must show them these terms so they know their rights.

We protect your rights with two steps: (1) copyright the software, and (2) offer you this license which gives you legal permission to copy, distribute and/or modify the software.

Also, for each author's protection and ours, we want to make certain that everyone understands that there is no warranty for this free software. If the software is modified by someone else and passed on, we want its recipients to know that what they have is not the original, so that any problems introduced by others will not reflect on the original authors' reputations.

Finally, any free program is threatened constantly by software patents. We wish to avoid the danger that redistributors of a free program will individually obtain patent licenses, in effect making the program proprietary. To prevent this, we have made it clear that any patent must be licensed for everyone's free use or not licensed at all.

The precise terms and conditions for copying, distribution and modification follow.

TERMS AND CONDITIONS FOR COPYING, DISTRIBUTION AND MODIFICATION

0. This License applies to any program or other work which contains a notice placed by the copyright holder saying it may be distributed under the terms of this General Public License. The "Program", below, refers to any such program or work, and a "work based on the Program" means either the Program or any derivative work under copyright law: that is to say, a work containing the Program or a portion of it, either verbatim or with modifications and/or translated into another language. (Hereinafter, translation is included without limitation in the term "modification".) Each licensee is addressed as "you".

Activities other than copying, distribution and modification are not covered by this License; they are outside its scope. The act of running the Program is not restricted, and the output from the Program is covered only if its contents constitute a work based on the Program (independent of having been made by running the Program). Whether that is true depends on what the Program does.

1. You may copy and distribute verbatim copies of the Program's source code as you receive it, in any medium, provided that you conspicuously and appropriately publish on each copy an appropriate copyright notice and disclaimer of warranty; keep intact all the notices that refer to this License and to the absence of any warranty; and give any other recipients of the Program a copy of this License along with the Program.

You may charge a fee for the physical act of transferring a copy, and you may at your option offer warranty protection in exchange for a fee.

2. You may modify your copy or copies of the Program or any portion of it, thus forming a work based on the Program, and copy and distribute such modifications or work under the terms of Section 1 above, provided that you also meet all of these conditions:

   a) You must cause the modified files to carry prominent notices stating that you changed the files and the date of any change.

   b) You must cause any work that you distribute or publish, that in whole or in part contains or is derived from the Program or any part thereof, to be licensed as a whole at no charge to all third parties under the terms of this License.

   c) If the modified program normally reads commands interactively when run, you must cause it, when started running for such interactive use in the most ordinary way, to print or display an announcement including an appropriate copyright notice and a notice that there is no warranty (or else, saying that you provide a warranty) and that users may redistribute the program under these conditions, and telling the user how to view a copy of this License. (Exception: if the Program itself is interactive but does not normally print such an announcement, your work based on the Program is not required to print an announcement.)

These requirements apply to the modified work as a whole. If identifiable sections of that work are not derived from the Program, and can be reasonably considered independent and separate works in themselves, then this License, and its terms, do not apply to those sections when you distribute them as separate works. But when you distribute the same sections as part of a whole which is a work based on the Program, the distribution of the whole must be on the terms of this License, whose permissions for other licensees extend to the entire whole, and thus to each and every part regardless of who wrote it.

Thus, it is not the intent of this section to claim rights or contest your rights to work written entirely by you; rather, the intent is to exercise the right to control the distribution of derivative or collective works based on the Program.

In addition, mere aggregation of another work not based on the Program with the Program (or with a work based on the Program) on a volume of a storage or distribution medium does not bring the other work under the scope of this License.

3. You may copy and distribute the Program (or a work based on it, under Section 2) in object code or executable form under the terms of Sections 1 and 2 above provided that you also do one of the following:

   a) Accompany it with the complete corresponding machine-readable source code, which must be distributed under the terms of Sections 1 and 2 above on a medium customarily used for software interchange;or,

   b) Accompany it with a written offer, valid for at least three years, to give any third party, for a charge no more than your cost of physically performing source distribution, a complete machine-readable copy of the corresponding source code, to be distributed under the terms of Sections 1 and 2 above on a medium customarily used for software interchange; or,

   c) Accompany it with the information you received as to the offer to distribute corresponding source code. (This alternative is allowed only for noncommercial distribution and only if you received the program in object code or executable form with such an offer, in accord with Subsection b above.)

The source code for a work means the preferred form of the work for making modifications to it. For an executable work, complete source code means all the source code for all modules it contains, plus any associated interface definition files, plus the scripts used to control compilation and installation of the executable. However, as a special exception, the source code distributed need not include anything that is normally distributed (in either source or binary form) with the major components (compiler, kernel, and so on) of the operating system on which the executable runs, unless that component itself accompanies the executable.

If distribution of executable or object code is made by offering access to copy from a designated place, then offering equivalent access to copy the source code from the same place counts as distribution of the source code, even though third parties are not compelled to copy the source along with the object code.

4. You may not copy, modify, sublicense, or distribute the Program except as expressly provided under this License. Any attempt otherwise to copy, modify, sublicense or distribute the Program is void, and will automatically terminate your rights under this License. However, parties who have received copies, or rights, from you under this License will not have their licenses terminated so long as such parties remain in full compliance.

5. You are not required to accept this License, since you have not signed it. However, nothing else grants you permission to modify or distribute the Program or its derivative works. These actions are prohibited by law if you do not accept this License. Therefore, by modifying or distributing the

Program (or any work based on the Program), you indicate your acceptance of this License to do so, and all its terms and conditions for copying, distributing or modifying the Program or works based on it.

6. Each time you redistribute the Program (or any work based on the Program), the recipient automatically receives a license from the original licensor to copy, distribute or modify the Program subject to these terms and conditions. You may not impose any further restrictions on the recipients' exercise of the rights granted herein. You are not responsible for enforcing compliance by third parties to this License.

7. If, as a consequence of a court judgment or allegation of patent infringement or for any other reason (not limited to patent issues), conditions are imposed on you (whether by court order, agreement or otherwise) that contradict the conditions of this License, they do not excuse you from the conditions of this License. If you cannot distribute so as to satisfy simultaneously your obligations under this License and any other pertinent obligations, then as a consequence you may not distribute the Program at all. For example, if a patent license would not permit royalty- free redistribution of the Program by all those who receive copies directly or indirectly through you, then the only way you could satisfy both it and this License would be to refrain entirely from distribution of the Program.

If any portion of this section is held invalid or unenforceable under any particular circumstance, the balance of the section is intended to apply and the section as a whole is intended to apply in other circumstances.

It is not the purpose of this section to induce you to infringe any patents or other property right claims or to contest validity of any such claims; this section has the sole purpose of protecting the integrity of the free software distribution system, which is implemented by public license practices. Many people have made generous contributions to the wide range of software distributed through that system in reliance on consistent application of that system; it is up to the author/ donor to decide if he or she is willing to distribute software through any other system and a licensee cannot impose that choice.

This section is intended to make thoroughly clear what is believed to be a consequence of the rest of this License.

8. If the distribution and/or use of the Program is restricted in certain countries either by patents or by copyrighted interfaces, the original copyright holder who places the Program under this License may add an explicit geographical distribution limitation excluding those countries, so that distribution is permitted only in or among countries not thus excluded. In such case, this License incorporates the limitation as if written in the body of this License.
9. The Free Software Foundation may publish revised and/or new versions of the General Public License from time to time. Such new versions will be similar in spirit to the present version, but may differ in detail to address new problems or concerns.

Each version is given a distinguishing version number. If the Program specifies a version number of this License which applies to it and "any later version", you have the option of following the terms and conditions either of that version or of any later version published by the Free Software Foundation. If the Program does not specify a version number of this License, you may choose any version ever published by the Free Software Foundation.

10. If you wish to incorporate parts of the Program into other free programs whose distribution conditions are different, write to the author to ask for permission. For software which is copyrighted by the Free Software Foundation, write to the Free Software Foundation; we sometimes make exceptions for this. Our decision will be guided by the two goals of preserving the free status of all derivatives of our free software and of promoting the sharing and reuse of software generally.

NO WARRANTY

11. BECAUSE THE PROGRAM IS LICENSED FREE OF CHARGE, THERE IS NO WARRANTY FOR THE PROGRAM, TO THE EXTENT PERMITTED BY APPLICABLE LAW. EXCEPT WHEN OTHERWISE STATED IN WRITING THE COPYRIGHT HOLDERS AND/OR OTHER PARTIES PROVIDE THE PROGRAM "AS IS" WITHOUT WARRANTY OF ANY KIND, EITHER EXPRESSED OR IMPLIED, INCLUDING, BUT NOT LIMITED TO, THE IMPLIED WARRANTIES OF MERCHANTABILITY AND FITNESS FOR A PARTICULAR PURPOSE. THE ENTIRE RISK AS TO THE QUALITY AND PERFORMANCE OF THE PROGRAM IS WITH YOU. SHOULD THE PROGRAM PROVE DEFECTIVE, YOU ASSUME THE COST OF ALL NECESSARY SERVICING, REPAIR OR CORRECTION.

12. IN NO EVENT UNLESS REQUIRED BY APPLICABLE LAW OR AGREED TO IN WRITING WILL ANY COPYRIGHT HOLDER, OR ANY OTHER PARTY WHO MAY MODIFY AND/OR REDISTRIBUTE THE PROGRAM AS PERMITTED ABOVE, BE LIABLE TO YOU FOR DAMAGES, INCLUDING ANY GENERAL, SPECIAL, INCIDENTAL OR CONSEQUENTIAL DAMAGES ARISING OUT OF THE USE OR INABILITY TO USE THE PROGRAM (INCLUDING BUT NOT LIMITED TO LOSS OF DATA OR DATA BEING RENDERED INACCURATE OR LOSSES SUSTAINED BY YOU OR THIRD PARTIES OR A FAILURE OF THE PROGRAM TO OPERATE WITH ANY OTHER PROGRAMS), EVEN IF SUCH HOLDER OR OTHER PARTY HAS BEEN ADVISED OF THE POSSIBILITY OF SUCH DAMAGES.

END OF TERMS AND CONDITIONS

How to Apply These Terms to Your New Programs

If you develop a new program, and you want it to be of the greatest possible use to the public, the best way to achieve this is to make it free software which everyone can redistribute and change under these terms.

To do so, attach the following notices to the program. It is safest to attach them to the start of each source file to most effectively convey the exclusion of warranty; and each file should have at least the "copyright" line and a pointer to where the full notice is found.

> <one line to give the program's name and an idea of what it does.>
> Copyright (C) <year> <name of author>
>
> This program is free software; you can redistribute it and/ or modify it under the terms of the GNU General Public License as published by the Free Software Foundation; either version 2 of the License, or (at your option) any later version.
>
> This program is distributed in the hope that it will be useful, but WITHOUT ANY WARRANTY; without even the implied warranty of MERCHANTABILITY or FITNESS FOR A PARTICULAR PURPOSE. See the GNU General Public License for more details.
>
> You should have received a copy of the GNU General Public License along with this program; if not, write to the Free Software Foundation, Inc., 59 Temple Place - Suite 330, Boston, MA 02111-1307, USA.

Also add information on how to contact you by electronic and paper mail.

If the program is interactive, make it output a short notice like this when it starts in an interactive mode:

> Gnomovision version 69, Copyright (C) year name of author Gnomovision comes with ABSOLUTELY NO WARRANTY; for details type 'show w'. This is free software, and you are welcome to redistribute it under certain conditions; type 'show c' for details.

The hypothetical commands 'show w' and 'show c' should show the appropriate parts of the General Public License. Of course, the commands you use may be called something other than 'show w' and 'show c'; they could even be mouse-clicks or menu items--whatever suits your program.

You should also get your employer (if you work as a programmer) or your school, if any, to sign a "copyright disclaimer" for the program, if necessary. Here is a sample; alter the names:

Yoyodyne, Inc., hereby disclaims all copyright interest in the program 'Gnomovision' (which makes passes at compilers) written by James Hacker.
<signature of Ty Coon>, 1 April 1989
Ty Coon, President of Vice

This General Public License does not permit incorporating your program into proprietary programs. If your program is a subroutine library, you may consider it more useful to permit linking proprietary applications with the library. If this is what you want to do, use the GNU Library General Public License instead of this License.

その他第三者ソフトウェアに関するお知らせ

本製品には弊社が第三者より直接的に又は間接的に使用の許諾を受けた下記ソフトウェアが含まれております。

Notices for file(s) :

audio.primary.default.so
audio.primary.ls6b-ek.so
local_time.default.so

Copyright (C) 2011 The Android Open Source Project

Licensed under the Apache License, Version 2.0 (the "License");
you may not use this file except in compliance with the License.
You may obtain a copy of the License at
http://www.apache.org/licenses/LICENSE-2.0

Unless required by applicable law or agreed to in writing, software distributed under the License is distributed on an "AS IS" BASIS, WITHOUT WARRANTIES OR CONDITIONS OF ANY KIND, either express or implied.

Notices for file(s) :

audio_policy.default.so

Copyright 2007, The Android Open Source Project

Licensed under the Apache License, Version 2.0 (the "License");
you may not use this file except in compliance with the License.
You may obtain a copy of the License at
http://www.apache.org/licenses/LICENSE-2.0

Unless required by applicable law or agreed to in writing, software distributed under the License is distributed on an "AS IS" BASIS, WITHOUT WARRANTIES OR CONDITIONS OF ANY KIND, either express or implied.

Notices for file(s) :

libaudioflinger.so
libcutils.so
libhardware.so
libhardware_legacy.so
liblog.so
libnetutils.so
libmedia.so
libmediaplayerservice.so
libstagefright.so
libstagefright_amrnb_common.so
libstagefright_avc_common.so
libstagefright_chromium_http.so
libstagefright_foundation.so
libstagefright_httplive.so
libstagefright_omx.so
libstagefright_soft_aacdec.so
libstagefright_soft_aacenc.so
libstagefright_soft_amrdec.so
libstagefright_soft_flacenc.so
libstagefright_soft_mp3dec.so
libstagefright_soft_rawdec.so
libstagefright_soft_vorbisdec.so
libsystem_server.so
libutils.so
libui.so
libdownmix.so
libvisualizer.so

Copyright (c) 2005-2008, The Android Open Source Project

Licensed under the Apache License, Version 2.0 (the "License");
you may not use this file except in compliance with the License.

Unless required by applicable law or agreed to in writing, software distributed under the License is distributed on an "AS IS" BASIS, WITHOUT WARRANTIES OR CONDITIONS OF ANY KIND, either express or implied.
See the License for the specific language governing permissions and limitations under the License.

Apache License
Version 2.0, January 2004
http://www.apache.org/licenses/

Notices for file(s) :

libaudioutils.so

Copyright 2011, The Android Open-Source Project

Licensed under the Apache License, Version 2.0 (the "License");
you may not use this file except in compliance with the License.
You may obtain a copy of the License at
http://www.apache.org/licenses/LICENSE-2.0

Unless required by applicable law or agreed to in writing, software distributed under the License is distributed on an "AS IS" BASIS, WITHOUT WARRANTIES OR CONDITIONS OF ANY KIND, either express or implied.

Notices for file(s) :

libbinder.so

Copyright (C) 2009 The Android Open Source Project

Licensed under the Apache License, Version 2.0 (the "License");
you may not use this file except in compliance with the License.
You may obtain a copy of the License at

http://www.apache.org/licenses/LICENSE-2.0

Unless required by applicable law or agreed to in writing, software distributed under the License is distributed on an "AS IS" BASIS,
WITHOUT WARRANTIES OR CONDITIONS OF ANY KIND, either express or implied.

Notices for file(s) :

libc.so
libstagefright_wfd.so
libcommon_time.so

Copyright (C) 2012 The Android Open Source Project

Licensed under the Apache License, Version 2.0 (the "License");
you may not use this file except in compliance with the License.
You may obtain a copy of the License at
http://www.apache.org/licenses/LICENSE-2.0

Unless required by applicable law or agreed to in writing, software distributed under the License is distributed on an "AS IS" BASIS, WITHOUT WARRANTIES OR CONDITIONS OF ANY KIND, either express or implied.

Notices for file(s) :

libcorkscrew.so

Copyright (c) 2011, The Android Open Source Project

Licensed under the Apache License, Version 2.0 (the "License");
you may not use this file except in compliance with the License.

Unless required by applicable law or agreed to in writing, software distributed under the License is distributed on an "AS IS" BASIS, WITHOUT WARRANTIES OR CONDITIONS OF ANY KIND, either express or implied.
See the License for the specific language governing permissions and limitations under the License.

Apache License
Version 2.0, January 2004
http://www.apache.org/licenses/

Notices for file(s) :

libeffects.so
libusbhost.so

Copyright (C) 2010 The Android Open Source Project

Licensed under the Apache License, Version 2.0 (the "License");
you may not use this file except in compliance with the License.
You may obtain a copy of the License at
http://www.apache.org/licenses/LICENSE-2.0

Unless required by applicable law or agreed to in writing, software distributed under the License is distributed on an "AS IS" BASIS, WITHOUT WARRANTIES OR CONDITIONS OF ANY KIND, either express or implied.

Notices for file(s) :

libdl.so

Copyright (C) 2007 The Android Open Source Project

Licensed under the Apache License, Version 2.0 (the "License");
you may not use this file except in compliance with the License.
You may obtain a copy of the License at
http://www.apache.org/licenses/LICENSE-2.0

Unless required by applicable law or agreed to in writing, software distributed under the License is distributed on an "AS IS" BASIS, WITHOUT WARRANTIES OR CONDITIONS OF ANY KIND, either express or implied.

Notices for file(s) :

libgabi++.so

Copyright (C) 2011 The Android Open Source Project

THIS SOFTWARE IS PROVIDED BY THE PROJECT AND CONTRIBUTORS ``AS IS'' AND ANY EXPRESS OR IMPLIED WARRANTIES, INCLUDING, BUT NOT LIMITED TO, THE IMPLIED WARRANTIES OF MERCHANTABILITY AND FITNESS FOR A PARTICULAR PURPOSE ARE DISCLAIMED. IN NO EVENT SHALL THE PROJECT OR CONTRIBUTORS BE LIABLE FOR ANY DIRECT, INDIRECT, INCIDENTAL, SPECIAL, EXEMPLARY, OR CONSEQUENTIAL DAMAGES HOWEVER CAUSED AND ON ANY THEORY OF LIABILITY, WHETHER IN CONTRACT, STRICT LIABILITY, OR TORT ARISING IN ANY WAY OUT OF THE USE OF THIS SOFTWARE, EVEN IF ADVISED OF THE POSSIBILITY OF SUCH DAMAGE.

Notices for file(s) :

libm.so

Copyright (C) 1993 by Sun Microsystems, Inc. All rights reserved.
Copyright (C) 2004 by Sun Microsystems, Inc. All rights reserved.
Copyright (c) 1985, 1993
The Regents of the University of California. All rights reserved.
Copyright (c) 1988, 1993

ソフトウェアに関する重要なお知らせ(続き)

The Regents of the University of California. All rights reserved.
Copyright (c) 1990 The Regents of the University of California.
All rights reserved.
Copyright (c) 1992, 1993
The Regents of the University of California. All rights reserved.
Copyright (c) 1993,94 Winning Strategies, Inc.
All rights reserved.
Copyright (c) 1996 The NetBSD Foundation, Inc.
All rights reserved. Copyright (c) 2003 Dag-Erling Sm?rgrav
All rights reserved. Copyright (c) 2003 Mike Barcroft <mike@FreeBSD.org>
Copyright (c) 2004 Stefan Farfeleder
All rights reserved.
Copyright (c)2002,2003, 2004-2005,2007,2008 David Schultz <das@FreeBSD.ORG>
All rights reserved.
Copyright (c) 2010 The Android Open Source Project
All rights reserved.

Notices for file(s) :

libnbaio.so
libstdc++.so
libsysutils.so

Copyright (C) 2008 The Android Open Source Project

Licensed under the Apache License, Version 2.0 (the "License");
you may not use this file except in compliance with the License.
You may obtain a copy of the License at
http://www.apache.org/licenses/LICENSE-2.0

Unless required by applicable law or agreed to in writing, software distributed under the License is distributed on an "AS IS" BASIS, WITHOUT WARRANTIES OR CONDITIONS OF ANY KIND, either express or implied."

Notices for file(s) :

libsync.so

Copyright 2012 Google, Inc

Licensed under the Apache License, Version 2.0 (the "License");
you may not use this file except in compliance with the License.
You may obtain a copy of the License at

http://www.apache.org/licenses/LICENSE-2.0

Unless required by applicable law or agreed to in writing, software distributed under the License is distributed on an "AS IS" BASIS, WITHOUT WARRANTIES OR CONDITIONS OF ANY KIND, either express or implied.

Notices for file(s) :

libthread_db.so

Copyright 2006 The Android Open Source Project

Notices for file(s) :

libconnectivitymanager.so

Copyright (C) 2013 The Android Open Source Project

Licensed under the Apache License, Version 2.0 (the "License");
you may not use this file except in compliance with the License.
You may obtain a copy of the License at
http://www.apache.org/licenses/LICENSE-2.0

Unless required by applicable law or agreed to in writing, software distributed under the License is distributed on an "AS IS" BASIS, WITHOUT WARRANTIES OR CONDITIONS OF ANY KIND, either express or implied.

Notices for file(s) :

libcrypto.so
libssl.so

Copyright (c) 1998-2011 The OpenSSL Project. All rights reserved.
Copyright (C) 1995-1998 Eric Young (eay@cryptsoft.com) All rights reserved.

This package is an SSL implementation written by Eric Young (eay@cryptsoft.com).
The implementation was written so as to conform with Netscapes SSL.

This library is free for commercial and non-commercial use as long as the following conditions are aheared to. The following conditions apply to all code found in this distribution, be it the RC4, RSA, lhash, DES, etc., code; not just the SSL code. The SSL documentation included with this distribution is covered by the same copyright terms except that the holder is Tim Hudson (tjh@cryptsoft.com).

Notices for file(s) :

libexpat.so

Copyright (c) 1998, 1999, 2000 Thai Open Source Software Center Ltd and Clark Cooper
Copyright (c) 2001, 2002, 2003, 2004, 2005, 2006 Expat maintainers.

Permission is hereby granted, free of charge, to any person obtaining a copy of this software and associated documentation files (the Software), to deal in the Software without restriction, including without limitation the rights to use, copy, modify, merge, publish, distribute, sublicense, and/or sell copies of the Software, and to permit persons to whom the Software is furnished to do so, subject to the following conditions:

The above copyright notice and this permission notice shall be included in all copies or substantial portions of the Software.

THE SOFTWARE IS PROVIDED "AS IS", WITHOUT WARRANTY OF ANY KIND, EXPRESS OR IMPLIED, INCLUDING BUT NOT LIMITED TO THE WARRANTIES OF MERCHANTABILITY, FITNESS FOR A PARTICULAR PURPOSE AND NONINFRINGEMENT.
IN NO EVENT SHALL THE AUTHORS OR COPYRIGHT HOLDERS BE LIABLE FOR ANY CLAIM, DAMAGES OR OTHER LIABILITY, WHETHER IN AN ACTION OF CONTRACT, TORT OR OTHERWISE, ARISING FROM, OUT OF OR IN CONNECTION WITH THE SOFTWARE OR THE USE OR OTHER DEALINGS IN THE SOFTWARE.

Notices for file(s) :

libext2_uuid.so

Redistribution and use in source and binary forms, with or without modification, are permitted provided that the following conditions are met:

1. Redistributions of source code must retain the above copyright notice, and the entire permission notice in its entirety, including the disclaimer of warranties.

2. Redistributions in binary form must reproduce the above copyright notice, this list of conditions and the following disclaimer in the documentation and/or other materials provided with the distribution.

3. The name of the author may not be used to endorse or promote products derived from this software without specific prior written permission.

THIS SOFTWARE IS PROVIDED ``AS IS'' AND ANY EXPRESS OR IMPLIED WARRANTIES, INCLUDING, BUT NOT LIMITED TO, THE IMPLIED WARRANTIES OF MERCHANTABILITY AND FITNESS FOR A PARTICULAR PURPOSE, ALL OF WHICH ARE HEREBY DISCLAIMED. IN NO EVENT SHALL THE AUTHOR BE LIABLE FOR ANY DIRECT, INDIRECT, INCIDENTAL, SPECIAL, EXEMPLARY, OR CONSEQUENTIAL DAMAGES (INCLUDING, BUT NOT LIMITED TO, PROCUREMENT OF SUBSTITUTE GOODS OR SERVICES; LOSS OF USE, DATA, OR PROFITS; OR BUSINESS INTERRUPTION) HOWEVER CAUSED AND ON ANY THEORY OF LIABILITY, WHETHER IN CONTRACT, STRICT LIABILITY, OR TORT (INCLUDING NEGLIGENCE OR OTHERWISE) ARISING IN ANY WAY OUT OF THE USE OF THIS SOFTWARE, EVEN IF NOT ADVISED OF THE POSSIBILITY OF SUCH DAMAGE.

Notices for file(s) :

libmdnssd.so

The majority of the source code in the mDNSResponder project is licensed under the terms of the Apache License, Version 2.0, available from:

<http://www.apache.org/licenses/LICENSE-2.0>

To accommodate license compatibility with the widest possible range of client code licenses, the shared library code, which is linked at runtime into the same address space as the client using it, is licensed under the terms of the "Three-Clause BSD License".

The Linux Name Service Switch code, contributed by National ICT Australia Ltd (NICTA) is licensed under the terms of the NICTA Public Software Licence (which is substantially similar to the "Three-Clause BSD License", with some additional language pertaining to Australian law).

Notices for file(s) :

libspeexresampler.so

Copyright (C) 2002-2008 Jean-Marc Valin
Copyright (C) 2002 Jean-Marc Valin & David Rowe
Copyright (C) 2003 Epic Games
Copyright (C) 2003 Epic Games (written by Jean-Marc Valin)
Copyright (C) 2004-2006 Epic Games
Copyright (C) 2005 Analog Devices
Copyright (C) 2005 Jean-Marc Valin, CSIRO, Christopher Montgomery
Copyright (C) 2006 David Rowe
Copyright (C) 2006-2008 CSIRO, Jean-Marc Valin, Xiph.Org Foundation
Copyright (C) 2008 Thorvald Natvig
Copyright (c) 2003-2004, Mark Borgerding
Copyright (c) 2005-2007, Jean-Marc Valin Copyright 1992, 1993, 1994 by Jutta Degener and Carsten Bormann,

Technische Universitaet Berlin THIS SOFTWARE IS PROVIDED BY THE COPYRIGHT HOLDERS AND CONTRIBUTORS ``AS IS'' AND ANY EXPRESS OR IMPLIED WARRANTIES, INCLUDING, BUT NOT LIMITED TO, THE IMPLIED WARRANTIES OF MERCHANTABILITY AND FITNESS FOR A PARTICULAR PURPOSE ARE DISCLAIMED. IN NO EVENT SHALL THE FOUNDATION OR CONTRIBUTORS BE LIABLE FOR ANY DIRECT, INDIRECT, INCIDENTAL, SPECIAL, EXEMPLARY, OR CONSEQUENTIAL DAMAGES HOWEVER CAUSED AND ON ANY THEORY OF LIABILITY, WHETHER IN CONTRACT, STRICT LIABILITY, OR TORT ARISING IN ANY WAY OUT OF THE USE OF THIS SOFTWARE, EVEN IF ADVISED OF THE POSSIBILITY OF SUCH DAMAGE.

Notices for file(s) :

libstlport.so

Copyright 1999,2000 Boris Fomitchev
Copyright 1996,97 Silicon Graphics Computer Systems, Inc.
Copyright 1997 Moscow Center for SPARC Technology.
Copyright 1994 Hewlett-Packard Company

This material is provided "as is", with absolutely no warranty expressed or implied. Any use is at your own risk.

Permission to use or copy this software for any purpose is hereby granted without fee, provided the above notices are retained on all copies. Permission to modify the code and to distribute modified code is granted, provided theabove notices are retained, and a notice that the code was modified is included with the above copyright notice.

Notices for file(s) :

libtinyalsa.so

Copyright 2011, The Android Open Source Project

THIS SOFTWARE IS PROVIDED BY The Android Open Source Project ``AS IS'' AND ANY EXPRESS OR IMPLIED WARRANTIES, INCLUDING, BUT NOT LIMITED TO, THE IMPLIED WARRANTIES OF MERCHANTABILITY AND FITNESS FOR A PARTICULAR PURPOSE ARE DISCLAIMED. IN NO EVENT SHALL The Android Open Source Project BE LIABLE FOR ANY DIRECT, INDIRECT, INCIDENTAL, SPECIAL, EXEMPLARY, OR CONSEQUENTIAL DAMAGES (INCLUDING, BUT NOT LIMITED TO, PROCUREMENT OF SUBSTITUTE GOODS OR SERVICES; LOSS OF USE, DATA, OR PROFITS; OR BUSINESS INTERRUPTION) HOWEVER CAUSED AND ON ANY THEORY OF LIABILITY, WHETHER IN CONTRACT, STRICT LIABILITY, OR TORT (INCLUDING NEGLIGENCE OR OTHERWISE) ARISING IN ANY WAY OUT OF THE USE OF THIS SOFTWARE, EVEN IF ADVISED OF THE POSSIBILITY OF SUCH DAMAGE.

Notices for file(s) :

libvorbisidec.so

Copyright (C) 2002-2009, Xiph.org Foundation
Copyright (C) 2010, Robin Watts for Pinknoise Productions Ltd
All rights reserved.

THIS SOFTWARE IS PROVIDED BY THE COPYRIGHT HOLDERS AND CONTRIBUTORS AS IS AND ANY EXPRESS OR IMPLIED WARRANTIES, INCLUDING, BUT NOT LIMITED TO, THE IMPLIED WARRANTIES OF

ソフトウェアに関する重要なお知らせ(続き)

MERCHANTABILITY AND FITNESS FOR A PARTICULAR PURPOSE ARE DISCLAIMED. IN NO EVENT SHALL THE COPYRIGHT OWNER OR CONTRIBUTORS BE LIABLE FOR ANY DIRECT, INDIRECT, INCIDENTAL, SPECIAL, EXEMPLARY, OR CONSEQUENTIAL DAMAGES HOWEVER CAUSED AND ON ANY THEORY OF LIABILITY, WHETHER IN CONTRACT, STRICT LIABILITY, OR TORT ARISING IN ANY WAY OUT OF THE USE OF THIS SOFTWARE, EVEN IF ADVISED OF THE POSSIBILITY OF SUCH DAMAGE.

Notices for file(s) :

libwpa_client.so

Copyright (c) 2002-2012, Jouni Malinen <j@w1.fi> and contributors
All Rights Reserved.

These programs are licensed under the BSD license

Notices for file(s) :

libz.so

(C) 1995-2012 Jean-loup Gailly and Mark Adler

This software is provided 'as-is', without any express or implied warranty. In no event will the authors be held liable for any damages arising from the use of this software.

Notices for file(s) :

libicui18n.so

Copyright (c) 1995-2008 International Business Machines Corporation and others All rights reserved.
Copyright (c) 1991-2007 Unicode, Inc. All rights reserved.

Distributed under the Terms of Use in http://www.unicode.org/copyright.html.
THE DATA FILES AND SOFTWARE ARE PROVIDED "AS IS", WITHOUT WARRANTY OF ANY KIND, EXPRESS OR IMPLIED, INCLUDING BUT NOT LIMITED TO THE WARRANTIES OF MERCHANTABILITY, FITNESS FOR A PARTICULAR PURPOSE AND NONINFRINGEMENT OF THIRD PARTY RIGHTS.
IN NO EVENT SHALL THE COPYRIGHT HOLDER OR HOLDERS INCLUDED IN THIS NOTICE BE LIABLE FOR ANY CLAIM, OR ANY SPECIAL INDIRECT OR CONSEQUENTIAL DAMAGES, OR ANY DAMAGES WHATSOEVER RESULTING FROM LOSS OF USE, DATA OR PROFITS, WHETHER IN AN ACTION OF CONTRACT, NEGLIGENCE OR OTHER TORTIOUS ACTION, ARISING OUT OF OR IN CONNECTION WITH THE USE OR PERFORMANCE OF THE DATA FILES OR SOFTWARE.

Notices for file(s) :

libicuuc.so

Copyright (c) 1995-2008 International Business Machines Corporation and others All rights reserved.
Copyright (c) 1991-2007 Unicode, Inc. All rights reserved.

Distributed under the Terms of Use in http://www.unicode.org/copyright.html.
THE DATA FILES AND SOFTWARE ARE PROVIDED "AS IS", WITHOUT WARRANTY OF ANY KIND, EXPRESS OR IMPLIED, INCLUDING BUT NOT LIMITED TO THE WARRANTIES OF MERCHANTABILITY, FITNESS FOR A PARTICULAR PURPOSE AND NONINFRINGEMENT OF THIRD PARTY RIGHTS.
IN NO EVENT SHALL THE COPYRIGHT HOLDER OR HOLDERS INCLUDED IN THIS NOTICE BE LIABLE FOR ANY CLAIM, OR ANY SPECIAL INDIRECT OR CONSEQUENTIAL DAMAGES, OR ANY DAMAGES WHATSOEVER RESULTING FROM LOSS OF USE, DATA OR PROFITS, WHETHER IN AN ACTION OF CONTRACT, NEGLIGENCE OR OTHER TORTIOUS ACTION, ARISING OUT OF OR IN CONNECTION WITH THE USE OR PERFORMANCE OF THE DATA FILES OR SOFTWARE.

Notices for file(s) :

libupnp.so

Copyright (C) Satoshi Konno 2005
Copyright (C) 2006 Nokia Corporation.

All rights reserved.

Redistribution and use in source and binary forms, with or without modification, are permitted provided that the following conditions are met:

* Redistributions of source code must retain the above copyright notice, this list of conditions and the following disclaimer.
* Redistributions in binary form must reproduce the above copyright notice, this list of conditions and the following disclaimer in the documentation and/or other materials provided with the distribution.
* Neither the name of the Cyber Garage nor the names of its contributors may be used to endorse or promote products derived from this software without specific prior written permission.

THIS SOFTWARE IS PROVIDED BY THE COPYRIGHT HOLDERS AND CONTRIBUTORS AS IS AND ANY EXPRESS OR IMPLIED WARRANTIES, INCLUDING, BUT NOT LIMITED TO, THE IMPLIED WARRANTIES OF MERCHANTABILITY AND FITNESS FOR A PARTICULAR PURPOSE ARE DISCLAIMED. IN NO EVENT SHALL THE COPYRIGHT OWNER OR CONTRIBUTORS BE LIABLE FOR ANY DIRECT, INDIRECT, INCIDENTAL, SPECIAL, EXEMPLARY, OR CONSEQUENTIAL DAMAGES (INCLUDING, BUT NOT LIMITED TO, PROCUREMENT OF SUBSTITUTE GOODS OR SERVICES; LOSS OF USE, DATA, OR PROFITS; OR BUSINESS INTERRUPTION) HOWEVER CAUSED AND ON ANY THEORY OF LIABILITY, WHETHER IN CONTRACT, STRICT LIABILITY, OR TORT (INCLUDING NEGLIGENCE OR OTHERWISE) ARISING IN ANY WAY OUT OF THE USE OF THIS SOFTWARE, EVEN IF ADVISED OF THE POSSIBILITY OF SUCH DAMAGE.

Notices for file(s) :

libwac_ark.so

Copyright (C) 2013 Apple Inc. All Rights Reserved.

This Apple software is supplied to you, by Apple Inc. ("Apple"), in your capacity as a current, and in good standing, Licensee in the MFi Licensing Program.
Use of this Apple software is governed by and subject to the terms and conditions of your MFi License, including, but not limited to, the restrictions specified in the provision entitled "Public Software", and is further subject to your agreement to the following additional terms, and your agreement that the use, installation, modification or redistribution of this Apple software constitutes acceptance of these additional terms. If you do not agree with these additional terms, please do not use, install, modify or redistribute this Apple software.

The Apple Software is provided by Apple on an "AS IS" basis. APPLE MAKES NO WARRANTIES, EXPRESS OR IMPLIED, INCLUDING WITHOUT LIMITATION THE IMPLIED WARRANTIES OF NON-INFRINGEMENT, MERCHANTABILITY AND FITNESS FOR A PARTICULAR PURPOSE, REGARDING THE APPLE SOFTWARE OR ITS USE AND OPERATION ALONE OR IN COMBINATION WITH YOUR PRODUCTS.

IN NO EVENT SHALL APPLE BE LIABLE FOR ANY SPECIAL, INDIRECT, INCIDENTAL OR CONSEQUENTIAL DAMAGES ARISING IN ANY WAY OUT OF THE USE, REPRODUCTION, MODIFICATION AND/OR DISTRIBUTION OF THE APPLE SOFTWARE, HOWEVER CAUSED AND WHETHER UNDER THEORY OF CONTRACT, TORT, STRICT LIABILITY OR OTHERWISE, EVEN IF APPLE HAS BEEN ADVISED OF THE POSSIBILITY OF SUCH DAMAGE.

Notices for file(s) :

libusb1.0.so

Android build config for libusb tests

Copyright (c) 2012-2013 RealVNC Ltd. <toby.gray@realvnc.com>

This library is free software; you can redistribute it and/or modify it under the terms of the GNU Lesser General Public License as published by the Free Software Foundation; either version 2.1 of the License, or (at your option) any later version.

This library is distributed in the hope that it will be useful, but WITHOUT ANY WARRANTY; without even the implied warranty of MERCHANTABILITY or FITNESS FOR A PARTICULAR PURPOSE.

Notices for file(s) :

libJson.so

Copyright (c) 2007-2010 Baptiste Lepilleur

Permission is hereby granted, free of charge, to any person obtaining a copy of this software and associated documentation files (the "Software"), to deal in the Software without restriction, including without limitation the rights to use, copy, modify, merge, publish, distribute, sublicense, and/or sell copies of the Software, and to permit persons to whom the Software is furnished to do so, subject to the following conditions:

The above copyright notice and this permission notice shall be included in all copies or substantial portions of the Software.

THE SOFTWARE IS PROVIDED "AS IS", WITHOUT WARRANTY OF ANY KIND, EXPRESS OR IMPLIED, INCLUDING BUT NOT LIMITED TO THE WARRANTIES OF MERCHANTABILITY, FITNESS FOR A PARTICULAR PURPOSE AND NONINFRINGEMENT. IN NO EVENT SHALL THE AUTHORS OR COPYRIGHT HOLDERS BE LIABLE FOR ANY CLAIM, DAMAGES OR OTHER LIABILITY, WHETHER IN AN ACTION OF CONTRACT, TORT OR OTHERWISE, ARISING FROM, OUT OF OR IN CONNECTION WITH THE SOFTWARE OR THE USE OR OTHER DEALINGS IN THE SOFTWARE.

以下、Apache License の原文を記載します。

Apache License

Version 2.0, January 2004

http://www.apache.org/licenses/

TERMS AND CONDITIONS FOR USE, REPRODUCTION, AND DISTRIBUTION

1. Definitions.

"License" shall mean the terms and conditions for use, reproduction, and distribution as defined by Sections 1 through 9 of this document.

"Licensor" shall mean the copyright owner or entity authorized by the copyright owner that is granting the License.

"Legal Entity" shall mean the union of the acting entity and all other entities that control, are controlled by, or are under common control with that entity. For the purposes of this definition, "control" means (i) the power, direct or indirect, to cause the direction or management of such entity, whether by contract or otherwise, or (ii) ownership of fifty percent (50%) or more of the outstanding shares, or (iii) beneficial ownership of such entity.

"You" (or "Your") shall mean an individual or Legal Entity exercising permissions granted by this License.

"Source" form shall mean the preferred form for making modifications, including but not limited to software source code, documentation source, and configuration files.

"Object" form shall mean any form resulting from mechanical transformation or translation of a Source form, including but not limited to compiled object code, generated documentation, and conversions to other media types.

"Work" shall mean the work of authorship, whether in Source or Object form, made available under the License, as indicated by a copyright notice that is included in or attached to the work (an example is provided in the Appendix below).

"Derivative Works" shall mean any work, whether in Source or Object form, that is based on (or derivedfrom) the Work and for which the editorial revisions, annotations, elaborations, or other modifications represent, as a whole, an original work of authorship. For the purposes of this License, Derivative Works shall not include works that remain separable from, or merely link (or bind by name) to the interfaces of, the Work and Derivative Works thereof.

"Contribution" shall mean any work of authorship, including the original version of the Work and any modifications or additions to that Work or Derivative Works thereof, that is intentionally submitted to Licensor for inclusion in the Work by the copyright owner or by an individual or Legal Entity authorized to submit on behalf of the copyright owner. For the purposes of this definition, "submitted" means any form of electronic, verbal, or written communication sent to the Licensor or its representatives, including but not limited to communication on electronic mailing lists, source code control systems, and issue tracking systems that are managed by, or on behalf of, the Licensor for the purpose of discussing and improving the Work, but excluding communication that is conspicuously marked or otherwise designated in writing by the copyright owner as "Not a Contribution."

"Contributor" shall mean Licensor and any individual or Legal Entity on behalf of whom a Contribution has been received by Licensor and subsequently incorporated within the Work.

2. Grant of Copyright License.

Subject to the terms and conditions of this License, each Contributor hereby grants to You a perpetual, worldwide, non-exclusive, no-charge, royalty-free, irrevocable copyright license to reproduce, prepare Derivative Works of, publicly display, publicly perform, sublicense, and distribute the Work and such Derivative Works in Source or Object form.

3. Grant of Patent License.

Subject to the terms and conditions of this License, each Contributor hereby grants to You a perpetual, worldwide, non-exclusive, no-charge, royalty-free, irrevocable (except as stated in this section) patent license to make, have made, use, offer to sell, sell, import, and otherwise transfer the Work, where such license applies only to those patent claims licensable by such Contributor that are necessarily infringed by their Contribution(s) alone or by combination of their Contribution(s) with the Work to which such Contribution(s) was submitted. If You institute patent litigation against any entity (including a cross-claim or counterclaim in a lawsuit) alleging that the Work or a Contribution incorporated within the Work constitutes

direct or contributory patent infringement, then any patent licenses granted to You under this License for that Work shall terminate as of the date such litigation is filed.

4. Redistribution.

You may reproduce and distribute copies of the Work or Derivative Works thereof in any medium, with or without modifications, and in Source or Object form, provided that You meet the following conditions:

(a) You must give any other recipients of the Work or Derivative Works a copy of this License; and

(b) You must cause any modified files to carry prominent notices stating that You changed the files; and

(c) You must retain, in the Source form of any Derivative Works that You distribute, all copyright, patent, trademark, and attribution notices from the Source form of the Work, excluding those notices that do not pertain to any part of the Derivative Works; and

(d) If the Work includes a "NOTICE" text file as part of its distribution, then any Derivative Works that You distribute must include a readable copy of the attribution notices contained within such NOTICE file, excluding those notices that do not pertain to any part of the Derivative Works, in at least one of the following places: within a NOTICE text file distributed as part of the Derivative Works; within the Source form or documentation, if provided along with the Derivative Works; or, within a display generated by the Derivative Works, if and wherever such third-party notices normally appear. The contents of the NOTICE file are for informational purposes only and do not modify the License. You may add Your own attribution notices within Derivative Works that You distribute, alongside or as an addendum to the NOTICE text from the Work, provided that such additional attribution notices cannot be construed as modifying the License.

You may add Your own copyright statement to Your modifications and may provide additional or different license terms and conditions for use, reproduction, or distribution of Your modifications, or for any such Derivative Works as a whole, provided Your use, reproduction, and distribution of the Work otherwise complies with the conditions stated in this License.

5. Submission of Contributions.

Unless You explicitly state otherwise, any Contribution intentionally submitted for inclusion in the Work by You to the Licensor shall be under the terms and conditions of this License, without any additional terms or conditions.
Notwithstanding the above, nothing herein shall supersede or modify the terms of any separate license agreement you may have executed with Licensor regarding such Contributions.

6. Trademarks.

This License does not grant permission to use the trade names, trademarks, service marks, or product names of the Licensor, except as required for reasonable and customary use in describing the origin of the Work and reproducing the content of the NOTICE file.

7. Disclaimer of Warranty.

Unless required by applicable law or agreed to in writing, Licensor provides the Work (and each Contributor provides its Contributions) on an "AS IS" BASIS, WITHOUT WARRANTIES OR CONDITIONS OF ANY KIND, either express or implied, including, without limitation, any warranties or conditions of TITLE, NON-INFRINGEMENT, MERCHANTABILITY, or FITNESS FOR A PARTICULAR PURPOSE. You are solely responsible for determining the appropriateness of using or redistributing the Work and assume any risks associated with Your exercise of permissions under this License.

8. Limitation of Liability.

In no event and under no legal theory, whether in tort (including negligence), contract, or otherwise, unless required by applicable law (such as deliberate and grossly negligent acts) or agreed to in writing, shall any Contributor be liable to You for damages, including any direct, indirect, special, incidental, or consequential damages of any character arising as a result of this License or out of the use or inability to use the Work (including but not limited to damages for loss of goodwill, work stoppage, computer failure or malfunction, or any and all other commercial damages or losses), even if such Contributor has been advised of the possibility of such damages.

9. Accepting Warranty or Additional Liability.

While redistributing the Work or Derivative Works thereof, You may choose to offer, and charge a fee for, acceptance of support, warranty, indemnity, or other liability obligations and/or rights consistent with this License. However, in accepting such obligations, You may act only on Your own behalf and on Your sole responsibility, not on behalf of any other Contributor, and only if You agree to indemnify, defend, and hold each Contributor harmless for any liability incurred by, or claims asserted against, such Contributor by reason of your accepting any such warranty or additional liability.

END OF TERMS AND CONDITIONS

APPENDIX: How to apply the Apache License to your work.

To apply the Apache License to your work, attach the following boilerplate notice, with the fields enclosed by brackets "[]" replaced with your own identifying information. (Don't include the brackets!) The text should be enclosed in the appropriate comment syntax for the file format. We also recommend that a file or class name and description of purpose be included on the same "printed page" as the copyright notice for easier identification within third-party archives.

Copyright [yyyy] [name of copyright owner]

Licensed under the Apache License, Version 2.0 (the "License");
you may not use this file except in compliance with the License.
You may obtain a copy of the License at

http://www.apache.org/licenses/LICENSE-2.0

Unless required by applicable law or agreed to in writing, software distributed under the License is distributed on an "AS IS" BASIS, WITHOUT WARRANTIES OR CONDITIONS OF ANY KIND, either express or implied.
See the License for the specific language governing permissions and limitations under the License.

■ 保証書

取扱説明書の裏表紙が保証書になっています。保証書は、お買い上げの際に販売店が所定事項を記入してお渡ししておりますので、大切に保管してください。万が一販売店印の捺印やご購入日の記載が無い場合は、無償修理保証の対象外になりますので、ご購入時のレシートなどご購入店・ご購入日が確認できるものを一緒に保管してください。保証期間はお買い上げ日より1年です。

■ 補修用性能部品の保有期間

当社は、この製品の補修用性能部品(製品の機能を維持するために必要な部品)を製造打ち切り後8年間保有しています。

■ ご不明な点や修理に関するご相談は

修理に関するご相談、並びにご不明な点は、お買い上げの販売店またはティアック修理センター(裏表紙に記載)にお問い合わせください。

■ 修理を依頼されるときは

26ページの「困ったときは」に従って調べていただき、なお異常のあるときは使用を中止し、必ず電源プラグをコンセントから抜いて、お買い上げの販売店またはティアック修理センター(裏表紙に記載)にご連絡ください。

なお、本体の故障もしくは不具合により発生した付随的損害(録音内容などの補償)の責についてはご容赦ください。

保証期間中は

修理に際しましては保証書をご提示ください。
保証書の規定に従って、修理させていただきます。

保証期間が過ぎているときは

修理すれば使用できる場合は、ご希望により有料にて修理させていただきます。

修理料金の仕組み

技術料: 故障した製品を正常に修復するための料金です。
測定機等の設備費、技術者の人件費、技術教育費が含まれています。

部品代: 修理に使用した部品代金です。
その他修理に付帯する部材等を含む場合もあります。

その他: 製品を送るために必要な送料/梱包料などがあります。

修理の際ご連絡いただきたい内容

型名:Network Music System
WS-A70
シリアルナンバー:
お買い上げ日:
販売店名:
お客様のご連絡先
故障の状況(できるだけ詳しく)

■ 廃棄するときは

本機を廃棄する場合に必要になる収集費などの費用は、お客様のご負担になります。

分解・改造禁止

この機器は絶対に分解・改造しないでください。
この機器に対して、当社指定のサービス機関以外による修理や改造が行われた場合は、保証期間内であっても保証対象外となります。

当社指定のサービス機関以外による修理や改造によってこの機器が故障または損傷したり、人的・物的損害が生じても、当社は一切の責任を負いません。

保証書

品名および形名	Network Music System WS-A70
機番	
保証期間	本体　1年

この保証書は、本書記載内容で無料修理を行うことをお約束するものです。お買上げの日から左記期間中に故障が発生した場合は、本書をご提示の上、取扱説明書に記載のティアック修理センターまたはお買上げの販売店に修理をご依頼ください。

お客様にご記入いただいた保証書の控えは、保証期間内のサービス活動及びその後の安全点検活動のために記載内容を利用させていただく場合がございますので、ご了承ください。

お買上げ日	年　月　日	
お客様	お名前	様
	ご住所	〒 電話　(　)
販売店	所在地・名称 (印) 電話　(　)	

見本

無料修理規定

1. 取扱説明書、本体貼付ラベルなどの注意書に従った正常な使用状態で保証期間内に故障が発生した場合には、ティアック修理センターが無料修理いたします。
2. 保証期間内に故障して無料修理を受ける場合は、本書をご提示の上、ティアック修理センターまたはお買い上げの販売店に修理をご依頼ください。商品を送付していただく場合の送付方法については、事前にティアック修理センターにお問い合わせください。
   無償修理の対象は、お客さまが日本国内において購入された日本国内向け当社製品に限定されます。
3. ご転居、ご贈答品等でお買い上げの販売店に修理をご依頼になれない場合は、ティアック修理センターにご連絡ください。
4. 次の場合には保証期間内でも有料修理となります。
   (1) ご使用上の誤りおよび不当な修理や改造による故障および損傷
   (2) お買上げ後の輸送・移動・落下などによる故障および損傷
   (3) 火災、地震、水害、落雷、その他の天災地変、公害や異常電圧による故障および損傷
   (4) 接続している他の機器に起因する故障および損傷
   (5) 業務用の長時間使用など、特に苛酷な条件下において使用された場合の故障および損傷
   (6) メンテナンス
   (7) 本書の提示がない場合
   (8) 本書にお買上げ年月日、お客様名、販売店名 (印) の記入のない場合、あるいは字句を書き替えられた場合
5. 本書は日本国内においてのみ有効です。
   This warranty is valid only in Japan.
6. 本書は再発行いたしませんので、紛失しないよう大切に保管してください。

修理メモ

※ この保証書は、本書に明示した期間・条件のもとにおいて無料修理をお約束するものです。この保証書によって保証書を発行しているもの (保証責任者)、及びそれ以外の事業者に対するお客様の法律上の権利を制限するものではありません。保証期間経過後の修理などについてご不明の場合は、ティアック修理センターにお問い合わせください。

※ 保証期間経過後の修理、補修用性能部品の保有期間についての詳細は、取扱説明書をご覧ください。

ティアック株式会社　〒206-8530 東京都多摩市落合 1-47　https://teac.jp/jp/

この製品のお取り扱い等についてのお問い合わせ

AV お客様相談室
〒206-8530 東京都多摩市落合 1-47

0570-000-701
市内通話料でOK ナビダイヤル®
一般電話・公衆電話からは市内通話料金でご利用いただけます。

受付時間は、9:30 ～ 12:00/13:00 ～ 17:00 です。
(土・日・祝日・弊社指定休日を除く)

- ナビダイヤルがご利用頂けない場合

電話：042-356-9235 / FAX：042-356-9242

故障・修理や保守についてのお問い合わせ

ティアック修理センター
〒358-0026 埼玉県入間市小谷田 858

0570-000-501
市内通話料でOK ナビダイヤル®
一般電話・公衆電話からは市内通話料金でご利用いただけます。

受付時間は、9:30 ～ 17:00 です。
(土・日・祝日・弊社指定休日を除く)

- ナビダイヤルがご利用頂けない場合

電話：04-2901-1033 / FAX：04-2901-1036

● 住所や電話番号は、予告なく変更する場合があります。あらかじめご了承ください。